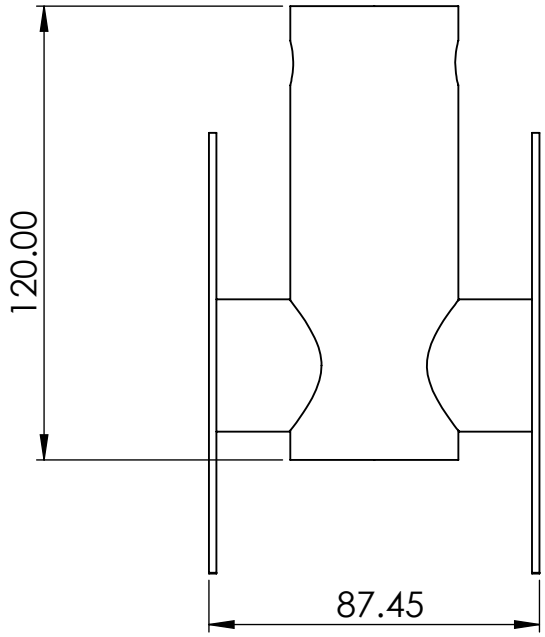

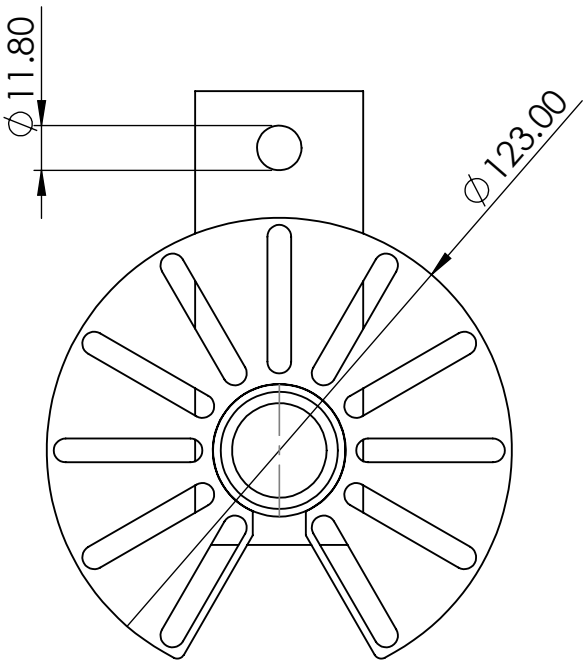

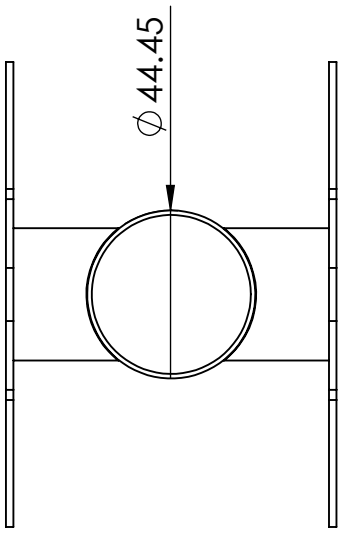

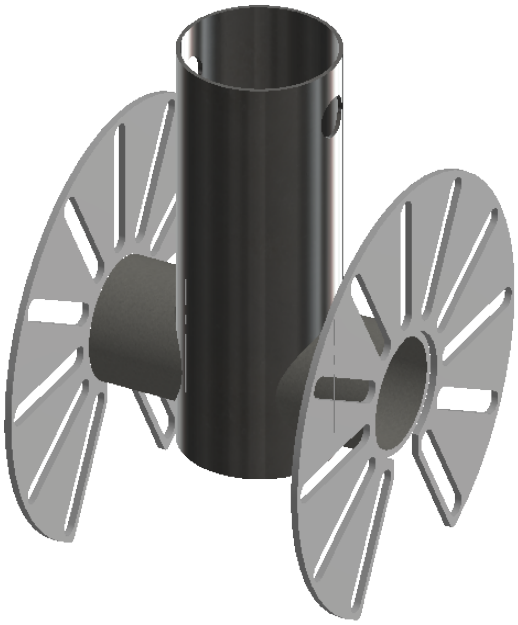

vista

Notes:

All Tolerances +/- 0.5% unless otherwise stated.

All Measurements are in mm and represent Raw Materials Only and allowances are needed for Welding Tracks & any additional coatings such as Powder Coating / Spray Paints etc.

Part Number:	VB-38CPAUTV2H123X
Description:	38mm Twin Vertical Mounting Bracket - 123mm
Date:	26 October 2026

Sheet Scale: 1:2

Sheet 1 Of 1

Vista makes no representation or warranties, express or implied, with respect to the reuse of the data provided herewith, regardless of its format or the means of its transmission. We make every effort to ensure accurate information, however there is no guarantee or representation to the user as to the accuracy, currency, suitability or reliability of this data. The user assumes all risks associated with its use. Vista assumes no responsibility for actual or consequential damage incurred as a result of any user's reliance on this data.