An Axis company

Access Unit

Access Control

Installation manual

Version: 2.13

www.2n.cz

The 2N TELEKOMUNIKACE a.s. is a Czech manufacturer and supplier of telecommunications equipment.

The product family developed by 2N TELEKOMUNIKACE a.s. includes GSM gateways, private branch exchanges (PBX), and door and lift communicators. 2N TELEKOMUNIKACE a.s. has been ranked among the Czech top companies for years and represented a symbol of stability and prosperity on the telecommunications market for almost two decades. At present, we export our products into over 120 countries worldwide and have exclusive distributors on all continents.

2N® is a registered trademark of 2N TELEKOMUNIKACE a.s. Any product and/or other names mentioned herein are registered trademarks and/or trademarks or brands protected by law.

2N TELEKOMUNIKACE a.s. administers the FAQ database to help you quickly find information and to answer your questions about 2N products and services. On www.faq.2n.cz you can find information regarding products adjustment and instructions for optimum use and procedures „What to do if...".

2N TELEKOMUNIKACE a.s. hereby declares that the 2N product complies with all basic requirements and other relevant provisions of the 1999/5/EC directive. For the full wording of the Declaration of Conformity see the CD-ROM (if enclosed) or our website at www.2n.cz.

The 2N TELEKOMUNIKACE a.s. is the holder of the ISO 9001:2009 certificate. All development, production and distribution processes of the company are managed by this standard and guarantee a high quality, technical level and professional aspect of all our products.

Content:

- 1. Product Overview
  - 1.1 Components and Associated Products
  - 1.2 Terms and Symbols
- 2. Description and Installation
  - 2.1 Before You Start
  - 2.2 Mechanical Installation
    - 2.2.1 One Module Box
    - 2.2.2 Two Module Box
    - 2.2.3 Module dimensions
  - 2.3 Electric Installation
  - 2.4 Extending Module Connection
  - 2.5 Mounting Completion
- 3. Maintenance
- 4. Technical Parameters
- 5. Supplementary Information
  - 5.1 Troubleshooting
  - 5.2 Directives, Laws and Regulations
  - 5.3 General Instructions and Cautions

1. Product Overview

Here is what you can find in this section:

- 1.1 Components and Associated Products
- 1.2 Terms and Symbols

Basic Properties

2N Access Unit is an elegant and reliable access IP system equipped with a number of useful functions, which are not always common in devices of this category.

2N Access Unit is a modular access system that meets all individual user needs. Unlike other access systems available on the market, 2N Access Unit is not a single-module system with a fixed functionality, but a user friendly modular system, allowing the user to assemble required modules and accessories on a "plug and play" basis. This approach provides individual configuration options and increase in functionality as necessary.

Keypad is a numeric keypad module that allows you to use the device for code lock switch activation.

Integrated card reader module provides the RFID card access control functionality. With additional software settings, you can control more functions than the door lock using the card.

Electric lock switch – this switch can be can be controlled via a numeric keypad or Automation actions. The switch can be completed with additional output modules if necessary. A wide range of the switch mode settings provide an infinite number of applications.

Resistance – 2N Access Unit is designed as a robust, mechanically resistant access system, which withstands any weather conditions without requiring additional accessories.

Installation of 2N Access Unit is very easy. All you have to do is assemble the required modules and connect the system to your LAN via a mains cable. Being of the "plug and play" type, the modules need not be configured individually. Feed the intercom either from a 12 V power supply or directly from your PoE-supporting LAN.

To configure 2N Access Unit , you need a PC equipped with any Internet browser. To manage extensive intercom installations easily, use the 2N Access Commander.

Advantages of Use

- Elegant design
- Weather resistance
- Variable mounting options (brick/plasterboard flush mounting, wall mounting)
- Optional numeric keypad with backlight
- Use of multiple modules of the same type – e.g. building entrance/exit card reader
- Integrated electronic lock switches with wide setting options
- Integrated RFID card reader module, Bluetooth module, fingerprint reader module or touch keypad module
- LAN (PoE) or external 12 V power supply
- Configuration via web interface
- HTTP server for configuration
- SNTP client for server time synchronisation
- SMTP client for e-mail sending
- TFTP/HTTP client for automatic configuration and firmware update

1.1 Components and Associated Products

Basic Units

2N Part No. 916009 Axis Part No. 01365-001 	• 2N® Access Unit 125kHz • The card reader provides you with access control via contactless cards or keyfobs. The module supports the 125 kHz EM-41xx or HID Proximity cards.

Part No. 916010
Axis Part No. 01366-001
 	
	• 2N® Access Unit 13.56 MHz, NFC ready
	• The card reader module provides you with access control via contactless cards or keyfobs. The module supports the following 13.56 MHz cards or other carriers (only card serial number is read):
	  • ISO 14443A Mifare Classic 1k & 4k, DESFire EV1, Mini, Plus S&X, Ultralight, Ultralight C
	  • ISO 14443B CEPAS, HID iCLASS
	  • JIS X 6319 Felica
	  • ISO 18092 SmartPhone with NFC/HCE, od since Android 4.3

2N Part No. 916013 Axis Part No. 01368-001 	2N® Access Unit Bluetooth • The Bluetooth reader is used for reading users secure ID numbers from the 2N® Mobile Key application of smart phones Android and iOS.

Part No. 916019 Axis Part No. 01367-001 	• 2N® Access Unit Fingerprint reader • The Fingerprint reader is used for verification of human fingers for access control and intercom control.
Part No. 916016 Axis Part No. 01370-001 	• 2N® Access Unit Touch keypad • The numeric touch keypad module helps you control the lock and use other code-accessible functions. The keypad digits and symbols are backlit.

Part No. 9160334
 	
	• 2N® Access Unit 2.0 RFID – 125kHz, 13.56MHz, NFC
	• The card reader provides you with access control via contactless cards or keyfobs. The module supports the 125 kHz EM-41xx or HID Proximity cards.
	• The card reader module provides you with access control via contactless cards or keyfobs. The module supports the following 13.56 MHz cards or other carriers (only card serial number is read):
	  • ISO 14443A Mifare Classic 1k & 4k, DESFire EV1, Mini, Plus S&X, Ultralight, Ultralight C
	  • ISO 14443B CEPAS, HID iCLASS
	  • JIS X 6319 Felica
	  • ISO 18092 SmartPhone with NFC/HCE, since Android 4.3

Part No. 9160334-S
Axis Part No. 01850-001
 	
	• 2N® Access Unit 2.0 RFID – 125kHz, 13.56MHz, NFC
	• The card reader provides you with access control via contactless cards or keyfobs. The module supports the 125 kHz EM-41xx or HID Proximity cards.
	• The card reader module provides you with access control via contactless cards or keyfobs. The module supports the following 13.56 MHz cards or other carriers (only card serial number is read):
	  • EM4100, EM4102
	  • ISO14443A Mifare Classic 1k & 4k, DESFire EV1, Mini, Plus S&X, SmartMX, Ultralight, Ultralight C, SLE44R35, my-d move (SLE66Rxx), PayPass, Legic Advant
	  • ISO14443B Calypso, CEPAS, Moneo, SRI512, SRT512, SRI4K, SRIX4K, PicoPass, HID iCLASS (also PACS ID from SE, SEOS)

Part No. 9160335
 	
	• 2N® Access Unit 2.0 Bluetooth & RFID – 125kHz, 13.56MHz, NFC
	• The bluetooth card reader module provides you with access control via contactless cards or keyfobs. The module supports the following 125 kHz and 13.56 MHz cards or other carriers (only card serial number is read):
	  • EM4100, EM4102
	  • ISO14443A Mifare Classic 1k & 4k, DESFire EV1, Mini, Plus S&X, SmartMX, Ultralight, Ultralight C, SLE44R35, my-d move (SLE66Rxx), PayPass, Legic Advant
	  • ISO14443B Calypso, CEPAS, Moneo, SRI512, SRT512, SRI4K, SRIX4K, PicoPass, HID iCLASS (SN only)

Part No. 9160335-S
Axis Part No. 01851-001
 	
	• 2N® Access Unit 2.0 Bluetooth & RFID – 125kHz, 13.56MHz, NFC
	• The bluetooth card reader module provides you with access control via contactless cards or keyfobs. The module supports the following 125 kHz and 13.56 MHz cards or other carriers (only card serial number is read):
	  • EM4100, EM4102
	  • ISO14443A Mifare Classic 1k & 4k, DESFire EV1, Mini, Plus S&X, SmartMX, Ultralight, Ultralight C, SLE44R35, my-d move (SLE66Rxx), PayPass, Legic Advant
	  • ISO14443B Calypso, CEPAS, Moneo, SRI512, SRT512, SRI4K, SRIX4K, PicoPass, HID iCLASS (also PACS ID from SE, SEOS)

Part No. 9160336
 	
	• 2N® Access Unit 2.0 Touch keypad & RFID – 125kHz, 13.56 MHz, NFC
	• The touch keypad and card reader module provides you with access control via contactless cards or keyfobs. The module supports the following 125 kHz and 13.56 MHz cards or other carriers (only card serial number is read):
	  • EM4100, EM4102
	  • ISO14443A Mifare Classic 1k & 4k, DESFire EV1, Mini, Plus S&X, SmartMX, Ultralight, Ultralight C, SLE44R35, my-d move (SLE66Rxx), PayPass, Legic Advant
	  • ISO14443B Calypso, CEPAS, Moneo, SRI512, SRT512, SRI4K, SRIX4K, PicoPass, HID iCLASS (SN only)

Part No. 9160336-S
Axis Part No. 01852-001
 	
	• 2N® Access Unit 2.0 Touch keypad & RFID – 125kHz, secured 13.56MHz, NFC
	• The touch keypad and card reader module provides you with access control via contactless cards or keyfobs. The module supports the following 125 kHz and 13.56 MHz cards or other carriers (only card serial number is read):
	  • EM4100, EM4102
	  • ISO14443A Mifare Classic 1k & 4k, DESFire EV1, Mini, Plus S&X, SmartMX, Ultralight, Ultralight C, SLE44R35, my-d move (SLE66Rxx), PayPass, Legic Advant
	  • ISO14443B Calypso, CEPAS, Moneo, SRI512, SRT512, SRI4K, SRIX4K, PicoPass, HID iCLASS (also PACS ID from SE, SEOS)

Tip

- Supported auxiliary modules: 2N® IP Verso modules are supported – RFID card reader (125 kHz; 13.56 MHz), keypad, 5-button module, Wiegand, etc.

License

2N Part No. 916012 Axis Part No. 01369-001	• 2N® Access Unit NFC license

Frames

2N Part No. 9155011 Axis Part No. 01278-001 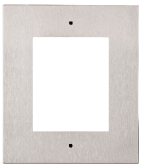	• Flush mounting frame, 1-module • Covering frame for the 1-module brick/plasterboard flush mounting box. This 1-module frame is used for connection of an OUT card reader or keypad, for example. Remember to order the frame when you order a 1-module flush mounting box, Part No. 9155014.
2N Part No. 9155011B Axis Part No. 01279-001 	• Flush mounting frame, 1-module • Covering frame for the 1-module brick/plasterboard flush mounting box. This 1-module frame is used for connection of an OUT card reader or keypad, for example. Remember to order the frame when you order a 1-module flush mounting box, Part No. 9155014.
2N Part No. 9155012 Axis Part No. 01281-001 	• Flush mounting frame, 2-module • Covering frame for the 2-module brick/plasterboard flush mounting box. Remember to order the frame when you order a 2-module flush mounting box, Part No. 9155015.

2N Part No. 9155012B Axis Part No. 01282-001 	• Flush mounting frame, 2-module • Covering frame for the 2-module brick/plasterboard flush mounting box. Remember to order the frame when you order a 2-module flush mounting box, Part No. 9155015.
2N Part No. 9155021 Axis Part No. 01287-001 	• Wall mounting frame, 1-module • Covering frame for wall (surface) mounting.This 1-module frame is used for connection of an OUT card reader or keypad, for example.
2N Part No. 9155021B Axis Part No. 01288-001 	• Wall mounting frame, 1-module • Covering frame for wall (surface) mounting.This 1-module frame is used for connection of an OUT card reader or keypad, for example.

2N Part No. 9155022 Axis Part No. 01289-001 	• Wall mounting frame, 2-module • Covering frame for wall (surface) mounting.
2N Part No. 9155022B Axis Part No. 01290-001 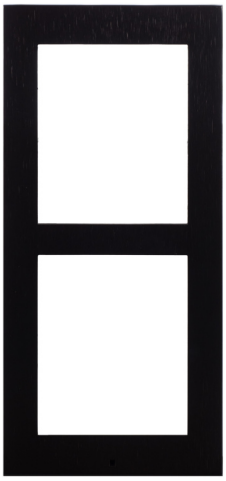	• Wall mounting frame, 2-module • Covering frame for wall (surface) mounting.

Tip

- The 1-module frame is used when an auxiliary module from 2N® IP Verso is mounted onto an extended interconnecting cable, for an OUT card reader or keypad, for example.

Tip

- Remember to order the flush mounting frame when you order a brick /plasterboard flush mounting box:
  - 1-module frame, Part No. **9155011** – 1-module flush mounting box, Part No. **9155014**.
  - 2-module frame, Part No. **9155012** – 2-module flush mounting box, Part No. **9155015**.

Extending Modules

2N Part No. 916020 Axis Part No. 01371-001 	• RJ-45 adapter

2N Part No. 9155033
Axis Part No. 01256-001
 	
	• 2N® IP Verso – RFID Reader, 13.56 MHz
	• The card reader module works with
	• 2N Access Unit as an OUT card reader. The module supports cards, key fobs and/or other 13.56 MHz standard carriers (only card serial number is read):
	  • ISO/IEC 14443A Mifare Classic 1k & 4k, DESFire EV1, Mini, Plus S&X, Ultralight, Ultralight C
	  • ISO/IEC 14443B CEPAS, HID iCLASS
	  • JIS X 6319 Felica

2N Part No. 9155040
Axis Part No. 01262-001
 	
	• 2N® IP Verso – RFID Reader NFC support, 13.56 MHz
	• The card reader module works with 2N Access Unit as an OUT card reader. The module supports cards, key fobs and /or other 13.56 MHz standard carriers (only card serial number is read):
	  • ISO/IEC 14443A Mifare Classic 1k & 4k, DESFire EV1, Mini, Plus S&X, Ultralight, Ultralight C
	  • ISO/IEC 14443B CEPAS, HID iCLASS
	  • JIS X 6319 Felica
	  • ISO/IEC 18092 SmartPhone with NFC/HCE support, since Android version 4.3

2N Part No. 9155032 Axis Part No. 01255-001 	• 2N® IP Verso – RFID Reader, 125 kHz • The card reader module works with 2N Access Unit as an OUT card reader. The module supports cards, key fobs and /or other 125 kHz standard carriers: EM-41xx or HID Proximity.

Part No. 9155082
 	
	• 2N® IP Verso – Bluetooth & RFID reader 125kHz, 13.56MHz, NFC
	• The bluetooth and card reader module works with 2N Access Unit as an OUT card reader. The module supports cards, key fobs and/or other 125 kHz and 13.56 MHz standard carriers (only card serial number is read):
	  • EM4100, EM4102, HID® Proximity
	  • ISO14443A Mifare Classic 1k & 4k, DESFire EV1, Mini, Plus S&X, SmartMX, Ultralight, Ultralight C, SLE44R35, my-d move (SLE66Rxx), PayPass, Legic Advant
	  • ISO14443B Calypso, CEPAS, Moneo, SRI512, SRT512, SRI4K, SRIX4K, PicoPass, HID iCLASS

Part No. 9155084
 	
	• **2N® IP Verso** – Bluetooth & RFID reader 125kHz, secured 13.56MHz, NFC
	• The bluetooth and secured card reader module works with **2N Access Unit** as an OUT card reader. The module supports cards, key fobs and/or other 125 kHz and 13.56 MHz standard carriers (only card serial number is read):
	  • **EM4100, EM4102, HID® Proximity**
	  • **ISO14443A** Mifare Classic 1k & 4k, DESFire EV1, Mini, Plus S&X, SmartMX, Ultralight, Ultralight C, SLE44R35, my-d move (SLE66Rxx), PayPass, Legic Advant
	  • **ISO14443B** Calypso, CEPAS, Moneo, SRI512, SRT512, SRI4K, SRIX4K, PicoPass, HID iCLASS (also PACS ID from SE, SEOS)

Part No. 9155081
 	
	• **2N® IP Verso** – Touch keypad & RFID reader 125kHz, 13.56 MHz, NFC
	• The touch keypad and card reader module works with **2N Access Unit** as an OUT card reader. The module supports cards, key fobs and/or other 125 kHz and 13.56 MHz standard carriers (only card serial number is read):
	  • **EM4100, EM4102, HID® Proximity**
	  • **ISO14443A** Mifare Classic 1k & 4k, DESFire EV1, Mini, Plus S&X, SmartMX, Ultralight, Ultralight C, SLE44R35, my-d move (SLE66Rxx), PayPass, Legic Advant
	  • **ISO14443B** Calypso, CEPAS, Moneo, SRI512, SRT512, SRI4K, SRIX4K, PicoPass, HID iCLASS (SN only)

Part No. 9155083
 	
	• 2N® IP Verso – Touch keypad & RFID reader 125kHz, secured 13.56MHz, NFC
	• The touch keypad and secured card reader module works with 2N Access Unit as an OUT card reader. The module supports cards, key fobs and/or other 125 kHz and 13.56 MHz standard carriers (only card serial number is read):
	  • EM4100, EM4102, HID® Proximity
	  • ISO14443A Mifare Classic 1k & 4k, DESFire EV1, Mini, Plus S&X, SmartMX, Ultralight, Ultralight C, SLE44R35, my-d move (SLE66Rxx), PayPass, Legic Advant
	  • ISO14443B Calypso, CEPAS, Moneo, SRI512, SRT512, SRI4K, SRIX4K, PicoPass, HID iCLASS (also PACS ID from SE, SEOS)

2N Part No. 9155031 Axis Part No. 01253-001 	• 2N® IP Verso – Keypad • The numeric keypad module helps enter a numeric entrance code. Use the keypad for departures or double entrance authentication. The keypad digits and symbols are backlit.
2N Part No. 9155031B Axis Part No. 01254-001 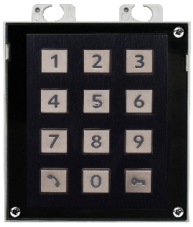	• 2N® IP Verso – Keypad • The numeric keypad module helps enter a numeric entrance code. Use the keypad for departures or double entrance authentication. The keypad digits and symbols are backlit.

2N Part No. 9155047 Axis Part No. 01277-001 	• 2N® IP Verso – Touch keypad • The numeric keypad module helps you dial users via their phonebook positions or phone numbers, control the lock and use other code-accessible functions. The keypad digits and symbols are backlit.
2N Part No. 9155037 Axis Part No. 01259-001 	• 2N® IP Verso – Wiegand • The Wiegand module helps you interconnect your system with other systems (access, security) via the Wiegand interface. The module is installed under another module, i.e. cannot be installed directly into the 2NAccess Unit (must be mounted outside).
2N Part No. 9155034 Axis Part No. 01257-001 	• 2N® IP Verso – I/O • The logic input/output module helps you integrate various sensors and control doors or other equipment. The module is installed under another module, i.e. cannot be installed directly into the 2N Access Unit (must be mounted outside).
2N Part No.9155030 Axis Part No. 01252-001 	• 2N® IP Verso – Info panel • The Infopanel module helps you add your company logo, opening hours and similar information to the access unit. The Infopanel has software-controlled backlight.

Part Numbers: 9155050, 01267-001 9155054, 01268-001 9155055, 01269-001 	• 1 m Interconnecting Cable • 3 m Interconnecting Cable • 5 m Interconnecting Cable

Mounting Accessories

2N Part No. 9155014 Axis Part No. 01284-001 	• Flush mounting box, 1-module • The box is designed for brick/plasterboard flush mounting of a 1-module installation. Supplied including accessories for multiple box assemblies.
2N Part No. 9155015 Axis Part No. 01285-001 	• Flush mounting box, 2-module • The box is designed for brick/plasterboard flush mounting of a 2-module installation. Supplied including accessories for multiple box assemblies.
2N Part No. 9155061 Axis Part No. 01293-001 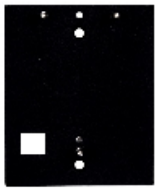	• Backplate, 1 module • A backplate for glass or uneven surface mounting.

2N Part No. 9155062 Axis Part No. 01294-001 	• Backplate, 2 modules • A backplate for glass or uneven surface mounting.

For the 2N Access Unit installation choose the appropriate mounting frame and box if necessary. The 2N Access Unit is designed for outdoor applications and requires no additional roof.

Electric Locks

Part No. 932071E 	• BEFO 11211 • 12 V / 230 mA DC • low consumption
Part No. 932081E 	• BEFO 11221 with momentum pin • 12 V / 230 mA DC • low consumption • For opening of the lock a short electrical impuls is sufficient, which unlocks the lock. Lock is then open until someone closes the door.
Part No. 932091E 	• BEFO 11211MB with mechanical blocking • 12 V / 230 mA DC • low consumption • Enables mechanically close or open the lock. When opened, the lock is open all the time. When closed, it behaves as standart electrical lock.
Part No. 932061E 	• 211211 door signalling, low consumption • 12 V / 230 mA • A regular lock with a built-in contact to indicate whether the door is open or closed.

Part No. 932072E	• 31211 fail-safe • 12 V / 170 mA DC • The failsafe lock is closed when electricity is switched on. When electricity is interrupted, the lock is opened.
Part No. 932062E	• 321211 fail-safe, door signalling • 12 V / 170 mA • The failsafe lock is closed when electricity is switched on. When electricity is interrupted, the lock is opened. • It contains a built-in contact to indicate whether the door is open or closed.

Tip

- FAQ: Electric locks – Differences between locks for 2N IP intercoms

Power Supply

Part Numbers: 91378100, 01394-001 91378100E 91378100US, 01403-001 	• PoE injector – without cable • PoE injetor – with EU cable • PoE injector – with US cable • For power supply of intercom via **ethernet** cable when PoE switch is not available.
Part No. 91341482E 91341482US 	• Stabilised 12 V / 1 A power supply needs to be used when no PoE is available.
Part No. 932928 	• For external power supply of the lock with 12 V AC voltage.

Additional Modules

2N Part No. 9159010 Axis Part No. 01386-001 	• Security relay • A simple, security enhancing add-on. Prevents lock tampering. Installed between the intercom, from which it is also supplied, and the lock to be controlled.
Part No. 9159013 	• Departure button • Connects the logic input for door unlocking from inside the building.
2N Part No. 9159012 Axis Part No. 01388-001 	• Magnetic door contact • A door installation set for door opening status identification. Used for door protection, open door or violent door opening detection.
2N Part No. 9134173 Axis Part No. 01384-001 	• RFID card, type Mifare Classic 1k, 13.56 MHz

2N Part No. 9134174 Axis Part No. 01385-001 	• RFID fob, type Mifare Classic 1k, 13.56 MHz
2N Part No. 9134165E Axis Part No. 01395-001 	• RFID card, type EM4100, 125 kHz
2N Part No. 9134166E Axis Part No. 01396-001 	• RFID fob, type EM4100, 125 kHz
2N Part No. 9137420E Axis Part No. 01399-001 	• External RFID card reader for connection to PC using a USB interface. • Suitable for system administration and adding of 125 kHz EM41xx cards using a web interface or the 2N® Access Commander.

2N Part No. 9137421E
Axis Part No. 01400-001
 	
	• **Ext. RFID Reader 13.56 MHz, 125 kHz + NFC/HCE (USB interface)**
	• External RFID card reader for connection to PC using a USB interface. Suitable for system administration and adding 13.56 MHz, 125 kHz cards and Android platform devices supporting NFC/HCE using **2N IP intercom** web interface or the **2N® Access Commander** application. It reads the same types of cards and devices as card readers in **2N IP intercoms**.
	  • 13.56 MHz/ISO/IEC 14443A Mifare Classic 1k & 4k, DESFire EV1, Mini, Plus S&X, Ultralight, Ultralight C
	  • 13.56 MHz/ISO/IEC 14443B CEPAS, HID iCLASS (CSN only)
	  • 13.56 MHz/JIS X 6319 Felica
	  • ISO/IEC 18092 SmartPhone with NFC/HCE support, since Android version 4.3 (**2N® Mobile Key** app required)
	  • EMarine

Part No. 9137424E
 	
	• **Ext. secured RFID Reader 13.56 MHz, 125 kHz + NFC /HCE (USB interface)**
	• External secured RFID card reader for connection to PC using a USB interface. Suitable for system administration and adding 13.56 MHz, 125 kHz cards and Android platform devices supporting NFC/HCE using **2N IP intercom** web interface or the **2N® Access Commander** application. It reads the same types of cards and devices as card readers in **2N IPintercoms**.
	  • 13.56 MHz/ISO/IEC 14443A Mifare Classic 1k & 4k, DESFire EV1, Mini, Plus S&X, Ultralight, Ultralight C
	  • 13.56 MHz/ISO/IEC 14443B CEPAS, HID iCLASS (CSN or PAC ID)
	  • 13.56 MHz/JIS X 6319 Felica
	  • ISO/IEC 18092 SmartPhone with NFC/HCE support, since Android version 4.3 (**2N® Mobile Key** app required)
	  • EMarine

2N Part No. 9137423E **Axis Part No. 01401-001** 	• **2N® IP intercom** - external fingerprint reader (USB interface)

2N Part No. 9137410E Axis Part No. 01397-001 	• External IP relay – 1 output • A stand-alone IP device, which can be controlled from an IP intercom via **HTTP** commands. Helps control a device remotely.
2N Part No. 9137411E Axis Part No. 01398-001 	• External IP relay – 4 outputs, PoE • A stand-alone IP device, which can be controlled from an IP intercom via **HTTP** commands. Helps control a device remotely.

Part No. 9159014EU/US/UK 	• 2N® 2Wire • (set of 2 adapters plus EU/US/UK power supply) • Converter **2N® 2Wire** helps you connect any IP device to your existing two-wire cabling from the original door bell/phone without reconfiguring. All you have to do is have one • **2N® 2Wire** unit at each end of the cable and connect one of them at least to the power supply. The **2N® 2Wire unit** then provides **PoE** supply not only to the other converter, but also to all the IP terminal equipment connected.
2N Part No. 9159030 Axis Part No. 01389-001 	• External 125 kHz RFID card reader • Secondary reader for connection to an internal reader. Allows for control of card entry from both sides of the door. IP67 cover, also suitable for exteriors. Reads EM4100 and EM4102 cards.

2N Part No. 9159031 Axis Part No. 01390-001 	• External 13.56MHz Mifare RFID card reader, Wiegand • Secondary reader for connection to an internal reader. Allows for control of card entry from both sides of the door. IP68 cover, also suitable for exteriors. Reads Mifare cards.

Tip

- Refer to the local 2N distributor for more accessories and recommendations please.

1.2 Terms and Symbols

The following symbols and pictograms are used in the manual:

Safety

- Always abide by this information to prevent persons from injury.

Warning

- Always abide by this information to prevent damage to the device.

Caution

- Important information for system functionality.

Tip

- Useful information for quick and efficient functionality.

Note

- Routines or advice for efficient use of the device.

2. Description and Installation

Here is what you can find in this section:

- 2.1 Before You Start
- 2.2 Mechanical Installation
- 2.3 Electric Installation
- 2.4 Extending Module Connection
- 2.5 Mounting Completion

2.1 Before You Start

Product Completeness Check

Check your 2N Access Unit package for completeness before installation.

- 1x 2N Access Unit
- 1x Hex key
- Brief manual

2.2 Mechanical Installation

Mounting Types Overview

Refer to the table below for a list of mounting types and necessary components. You can assemble multiple units in all the mounting types.

Flush mounting – classic bricks

- incl. hollow bricks, thermally insulated walls, etc.

What you need for mounting:

- a properly cut hole as instructed in the box package
- plaster, mounting glue, mounting foam or mortar as necessary
- 2N Access Unit
- flush mounting box and frame
  - 1 module: box Part No. 9155014, frame part No. 9155011
  - 2 modules: box Part No. 9155015, frame part No. 9155012

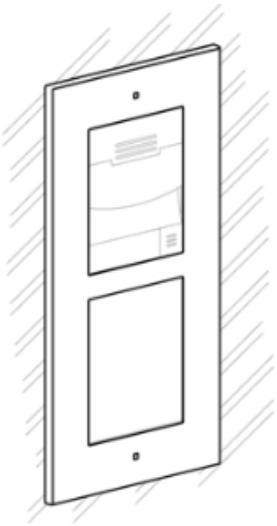

Flush mounting – plasterboard

What you need for mounting:

- a properly cut hole as instructed in the box package
- 2N Access Unit
- flush mounting box and frame
  - 1 module: box Part No. 9155014, frame part No. 9155011
  - 2 modules: box Part No. 9155015, frame part No. 9155012

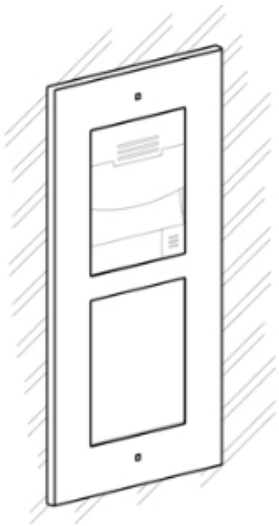

Wall (surface) mounting

- (concrete and steel structures, entry barrier columns, interiors, etc.)

What you need for mounting:

- 2N Access Unit
- a proper frame
- 1 module: frame Part No. 9155021
- 2 modules: frame Part No. 9155022

For uneven surfaces use a backplate for the required count of modules, Part Nos. 9155061 – 9155062

Caution

- The warranty does not apply to the product defects and failures arisen as a result of improper mounting (in contradiction herewith). The manufacturer is neither liable for damage caused by theft within an area that is accessible after the attached electric lock is switched on. The product is not designed as a burglar protection device except when used in combination with a standard lock, which has the security function.
- When the proper mounting instructions are not met, water might get in and destroy the electronics. It is because the intercom circuits are under continuous voltage and water infiltration causes an electro-chemical reaction. The manufacturer's warranty shall be void for products damaged in this way!

General Mounting Principles

Tip

- Select flush mounting where possible to make your product elegant looking, more vandal resistant and more secure.
- You are advised to buy the flush mounting box in advance and commission a building company to do the masonry for you, for example. The mounting box also helps you put your intercom exactly in the vertical position.

Caution

- Make sure that the diameter of the dowel holes is accurate to avoid falling out of the dowels! Use the mounting glue to secure the dowels if necessary.
- Make sure that the depth of the dowel holes is accurate!
- Do not use low-quality dowels to avoid falling out of the dowels of the wall!
- Having removed the front panel, make sure that no dirt gets inside the product (especially onto the sealing surface).
- Never turn an assembly of 2N Access Unit devices after mounting. Make sure that the flush mounting boxes have been installed accurately.
- Check the plasterboard wall and room interior pressure values. If the difference between the values is too great (as a result, e.g., of overpressure ventilation), separate the intercom using, for example, the mounting box enclosed and seal the cable passage.
- Surface mounting may cause problems on places exposed to potential vandalism (such as public garages, etc.). In this case, use steel anchoring elements instead of the dowels and screws included in the delivery.
- The wall mounting surface must be flat with the maximum inequality of 0.5 mm (e.g. prefabricated boards, glass, cut stone, etc.). If the surface is uneven, use flush mounting and a backplate, Part Nos. 9155061 – 9155062 , or equalise the wall surface.

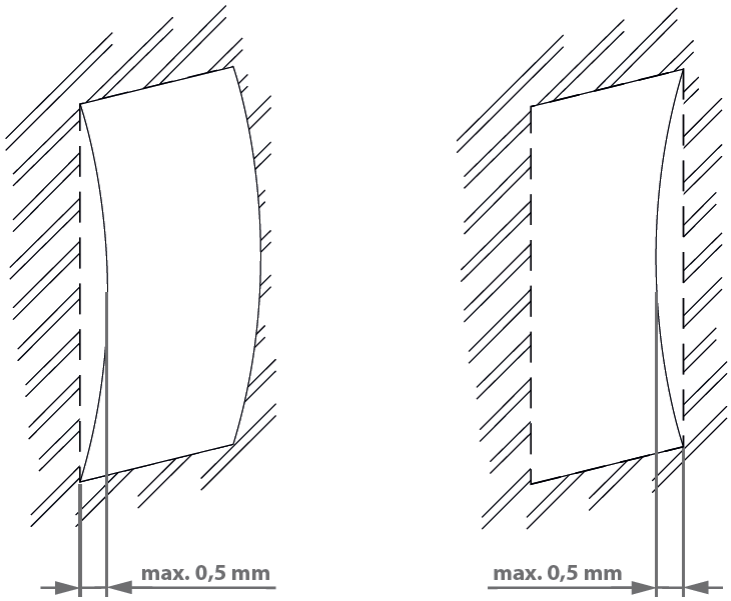

Risk of personal injury

- Eliminate the risk of personal injury! Wall mounting is not recommended for narrow passages or places where people's attention is distracted by something else. The manufacturer shall not be liable for injuries in such cases!

Module Installation

- 2.2.1 One Module Box
- 2.2.2 Two Module Box
- 2.2.3 Module dimensions

2.2.1 One Module Box

Flush mounting – classic bricks

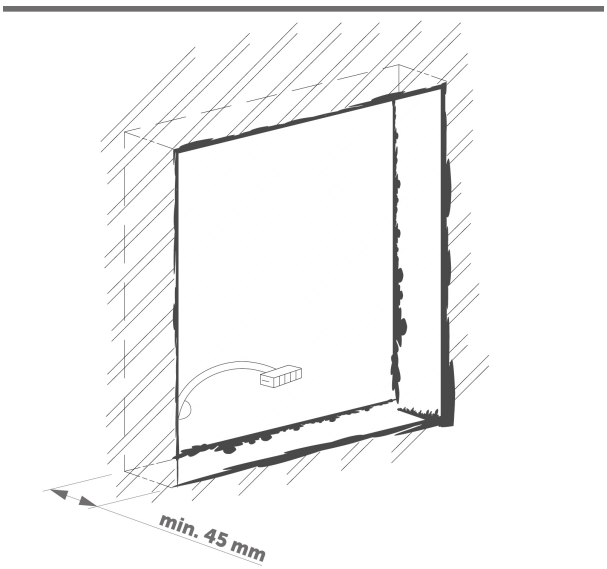

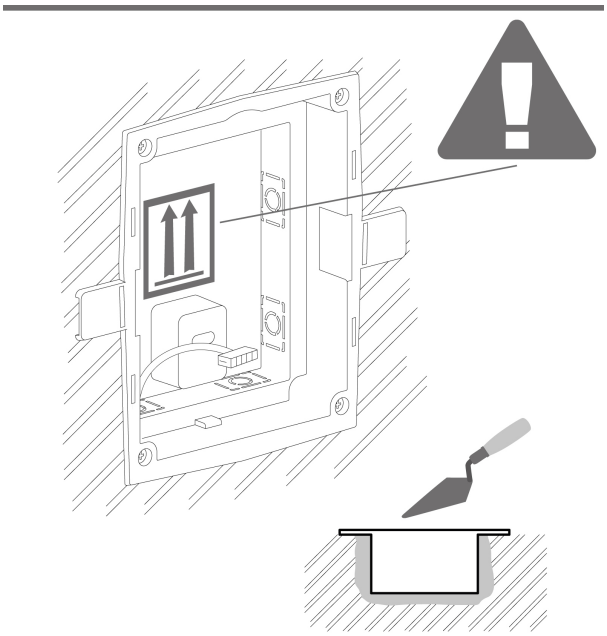

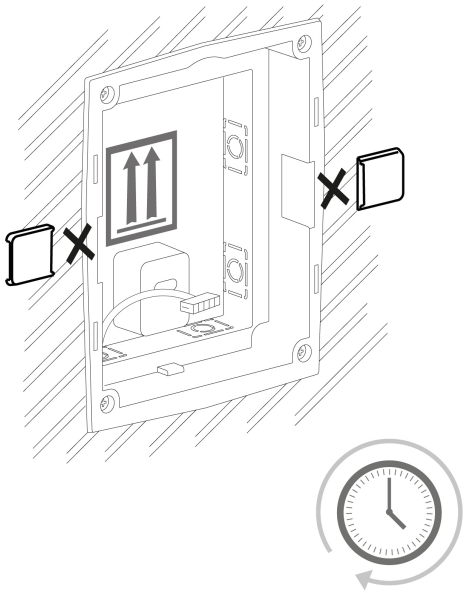

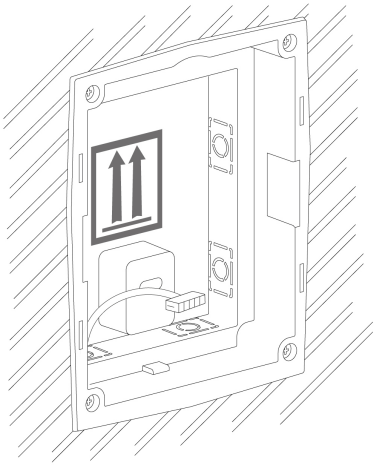

Flush mounting – plasterboard

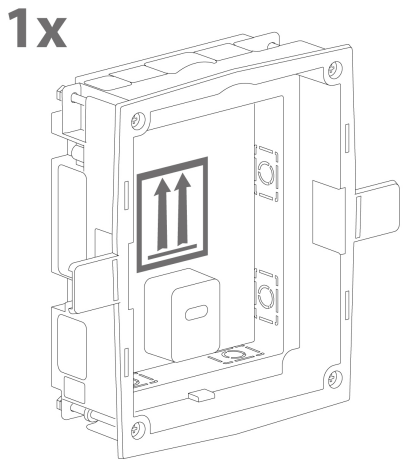

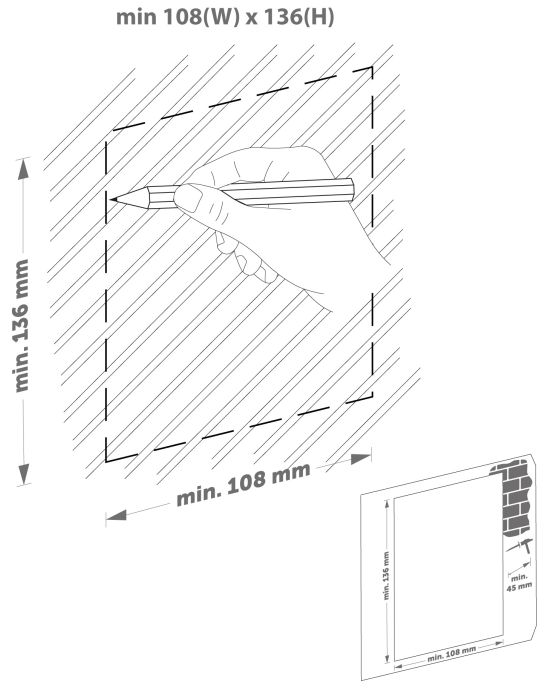

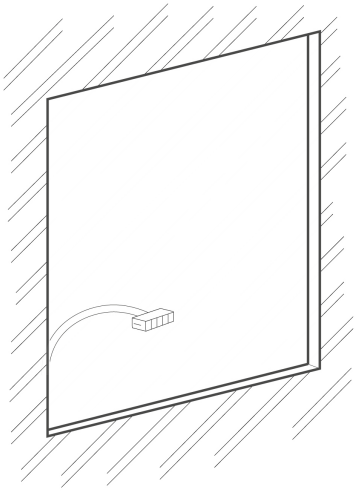

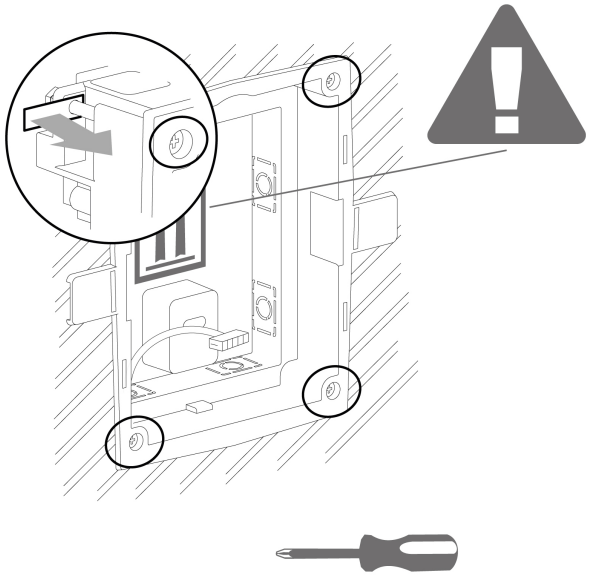

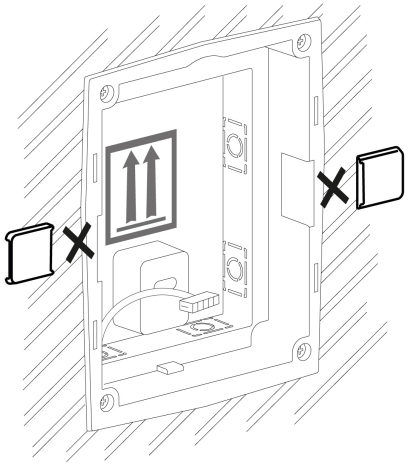

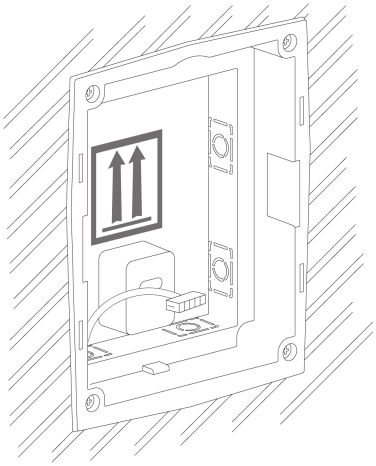

Module flush mounting

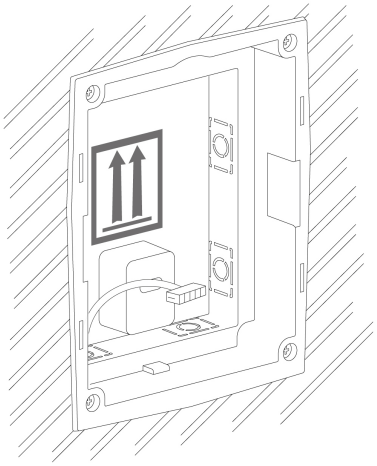

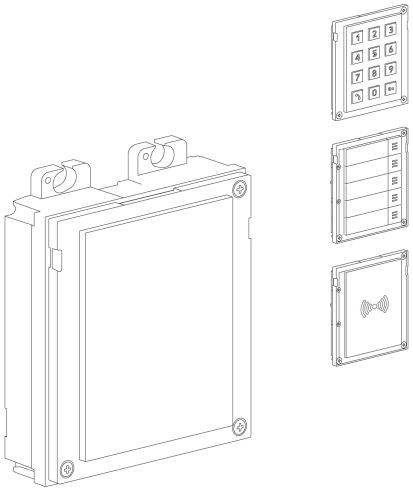

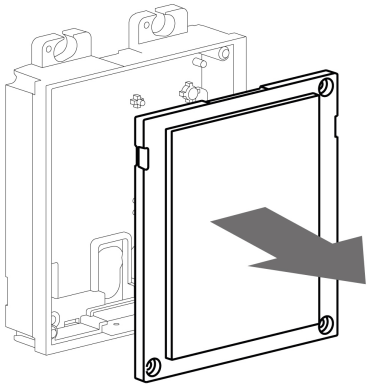

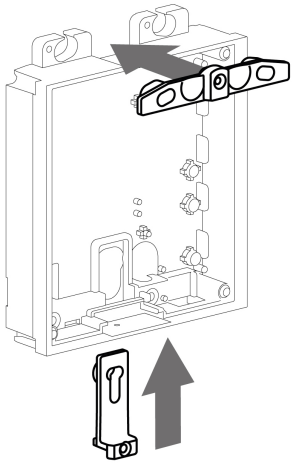

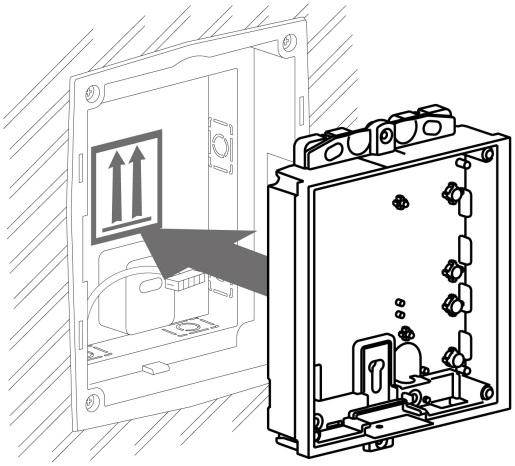

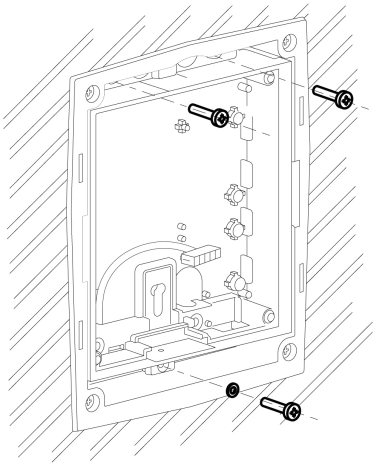

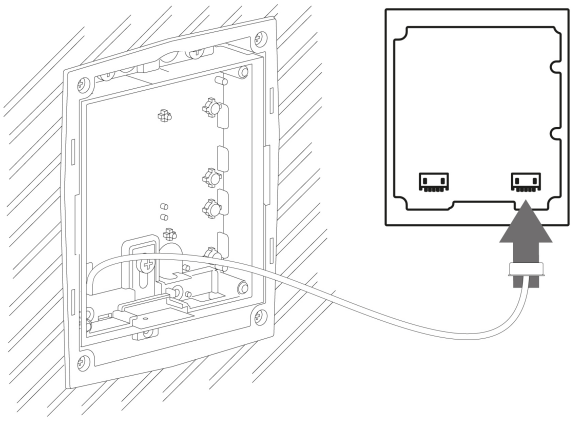

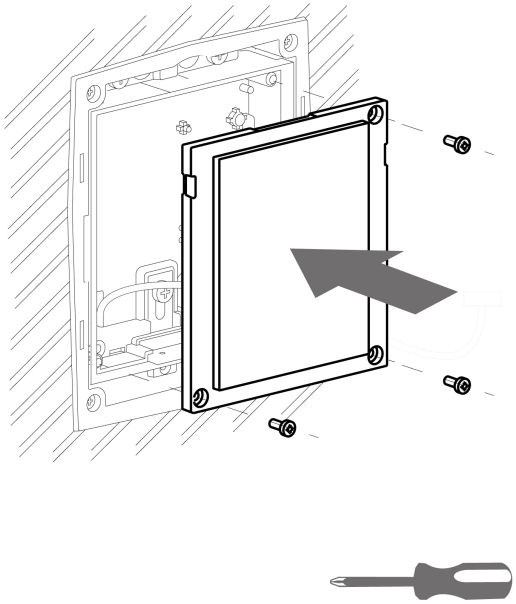

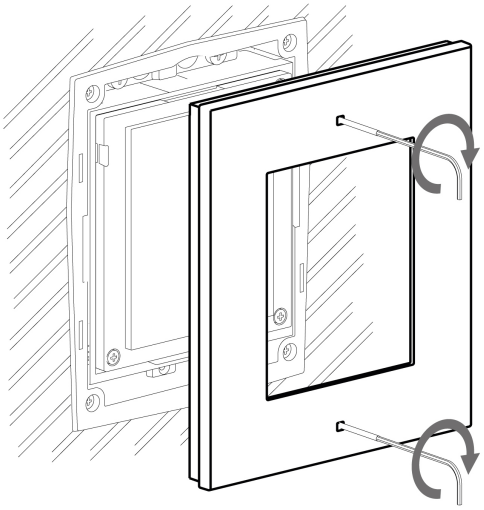

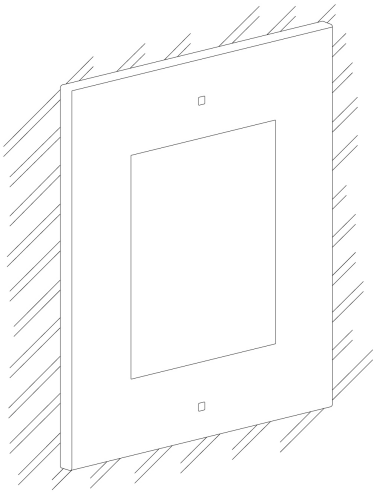

Wall (surface) mounting

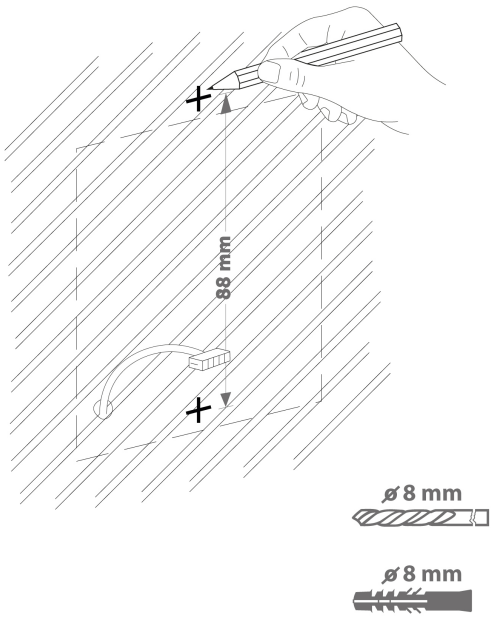

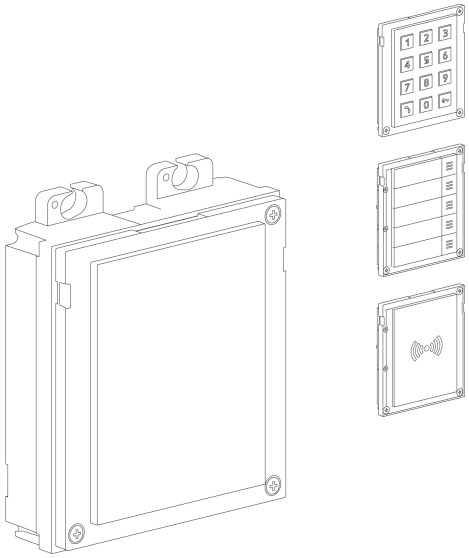

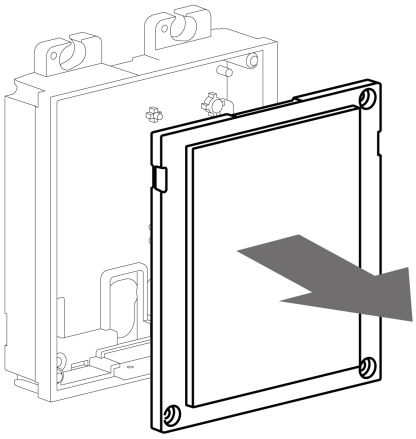

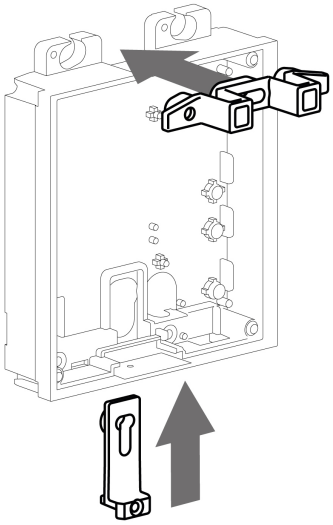

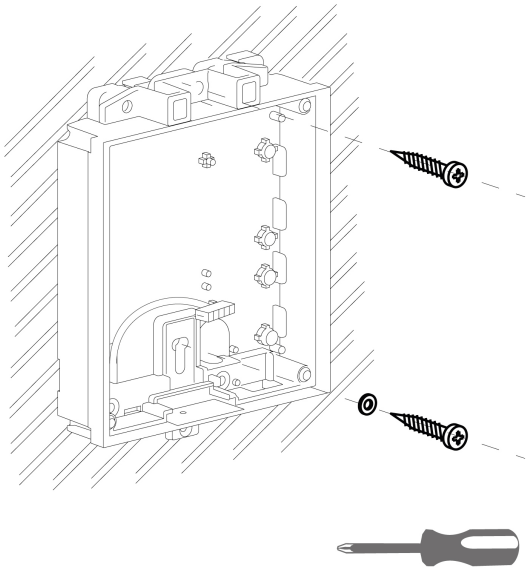

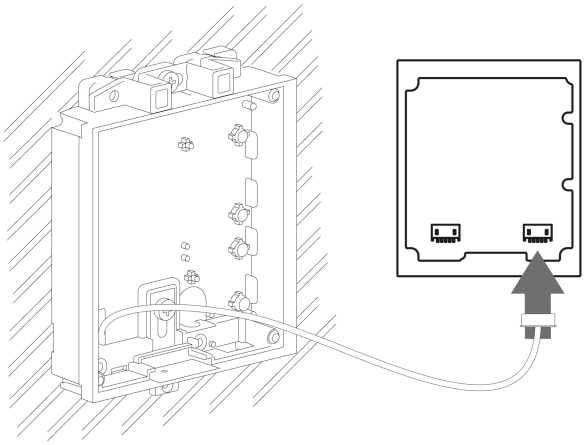

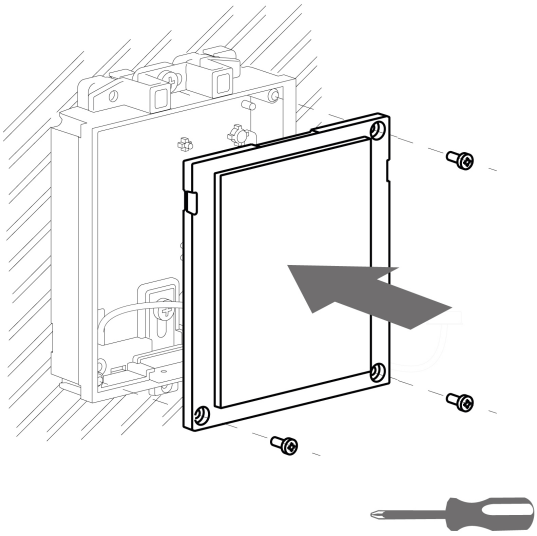

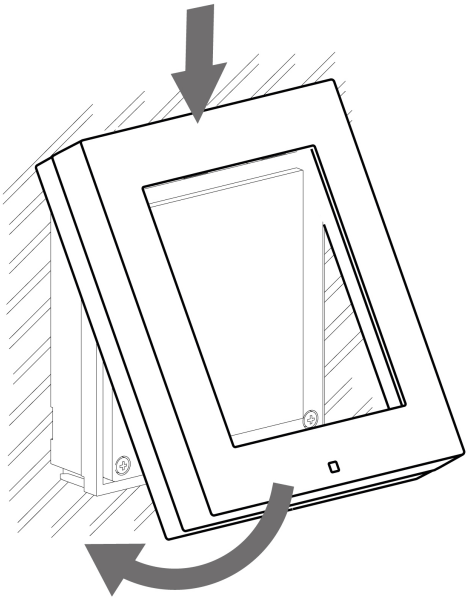

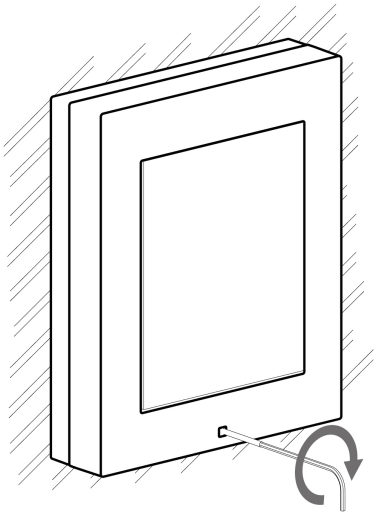

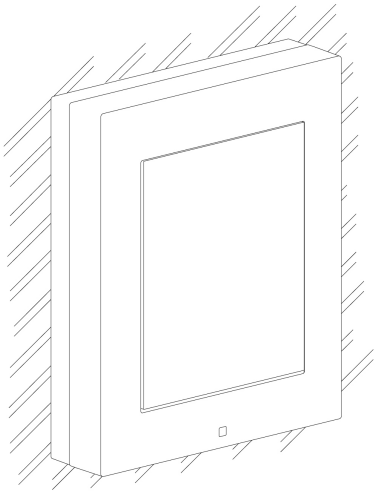

2.2.2 Two Module Box

Flush mounting – classic bricks

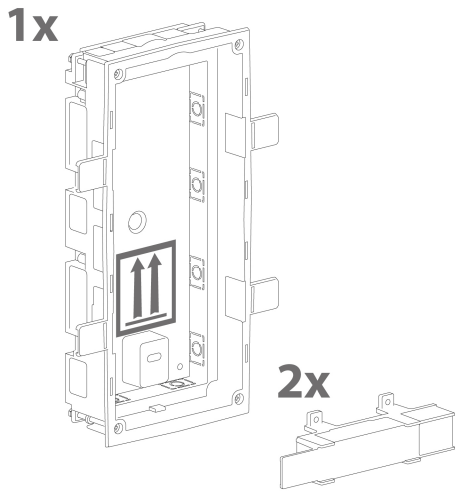

min 108(W) x 238(H) x 45(D) mm

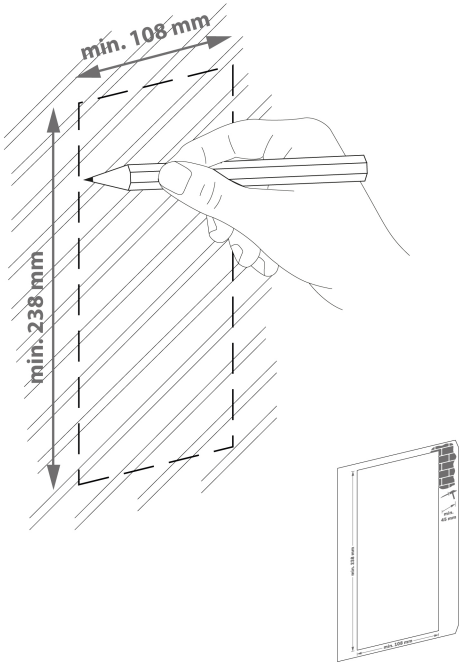

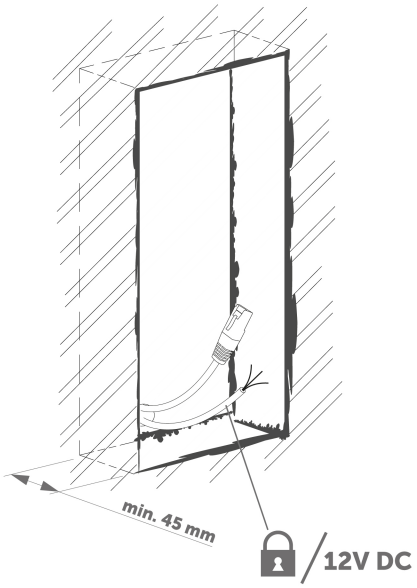
min. 45 mm
12V DC

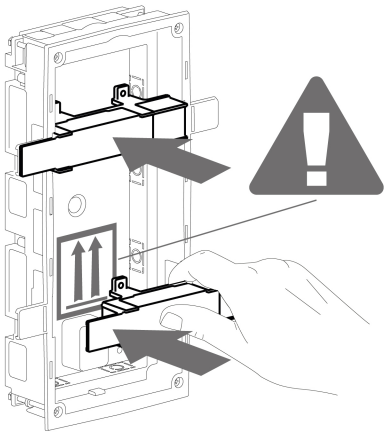

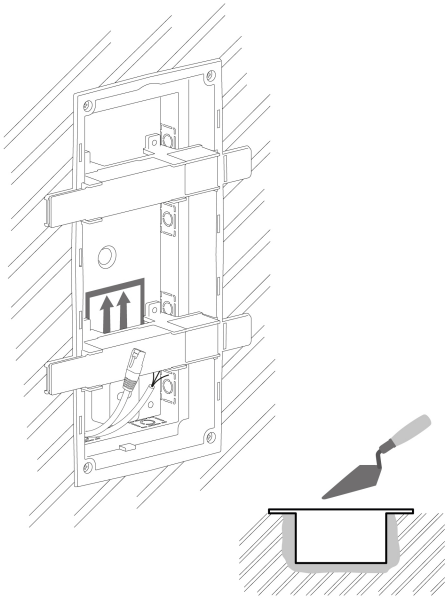

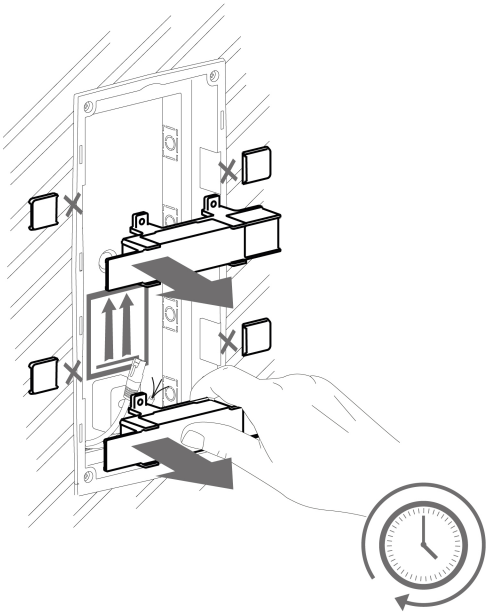

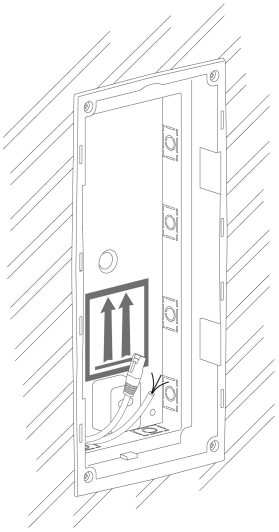

Flush mounting – plasterboard

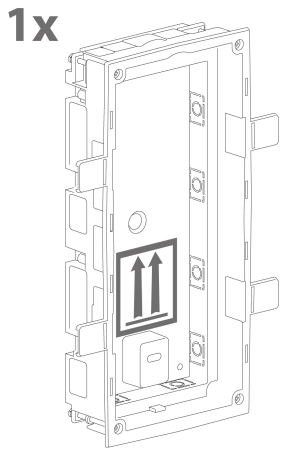

min 108(W) x 238(H) mm

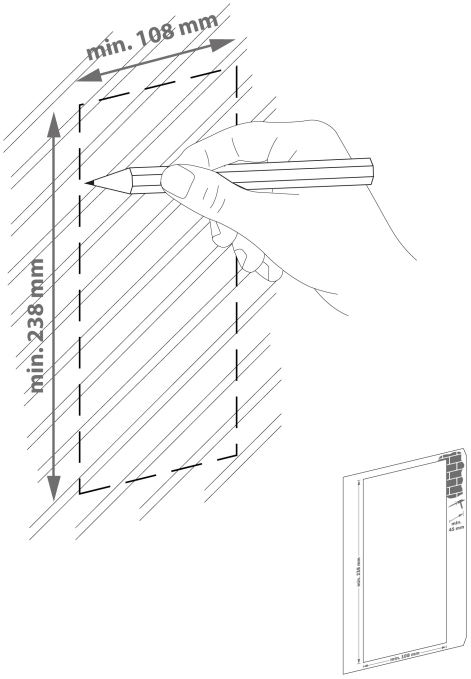

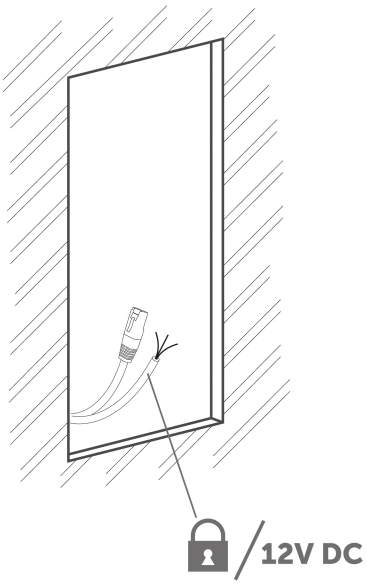
12V DC

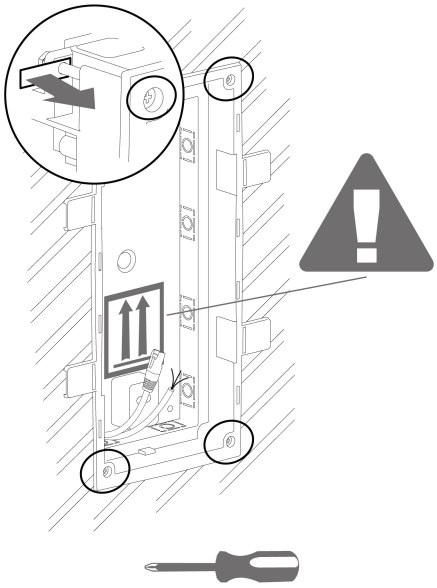

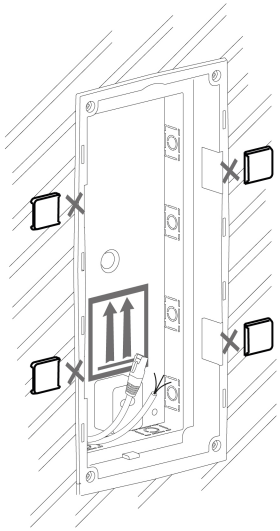

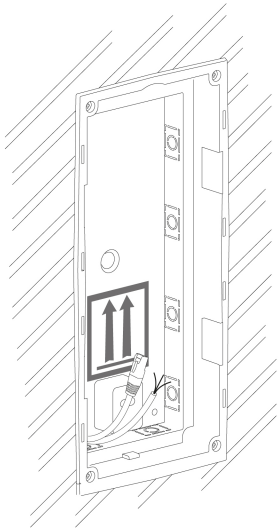

Module flush mounting

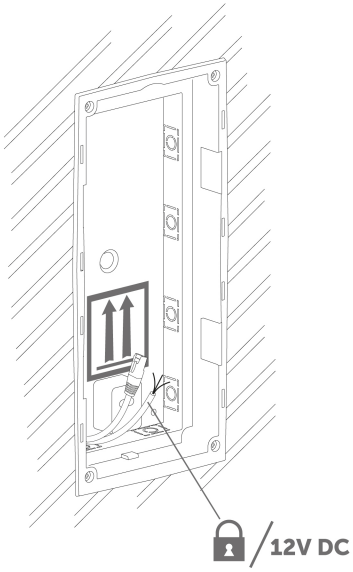

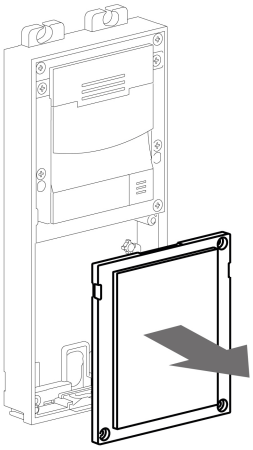

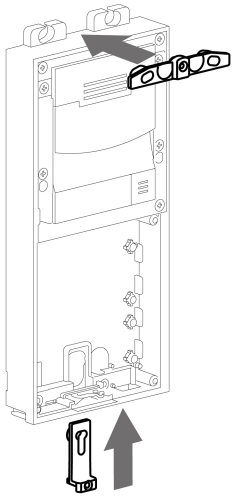

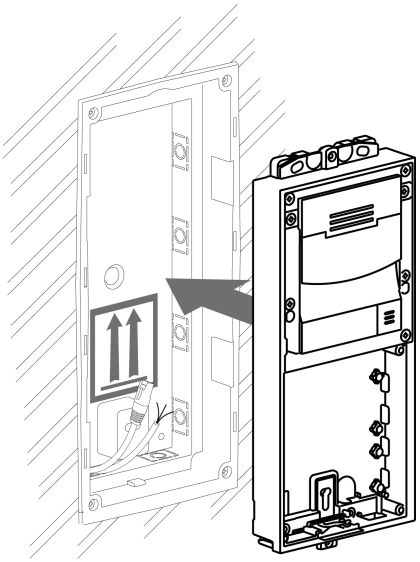

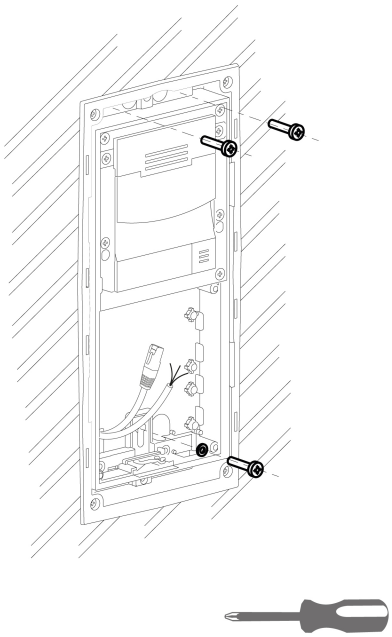

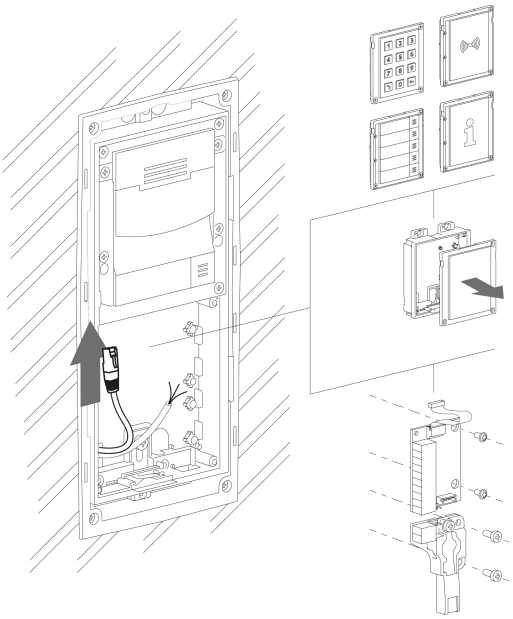

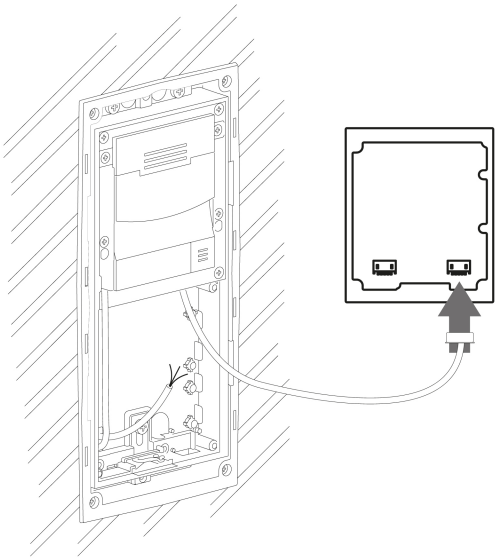

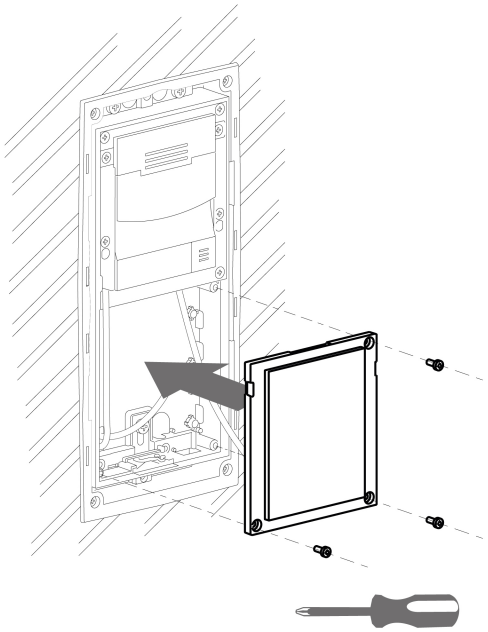

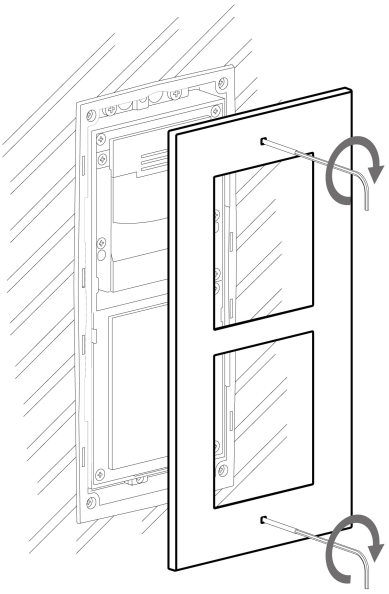

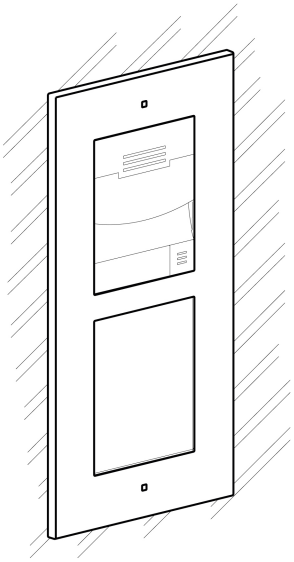

Wall (surface) mounting

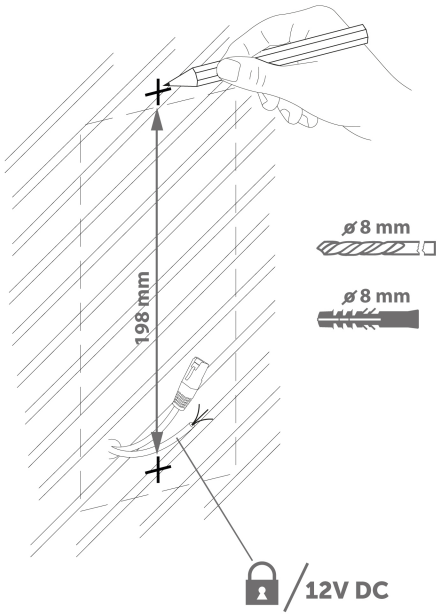

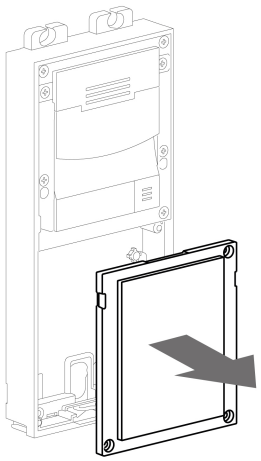

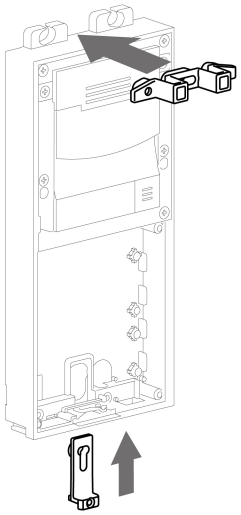

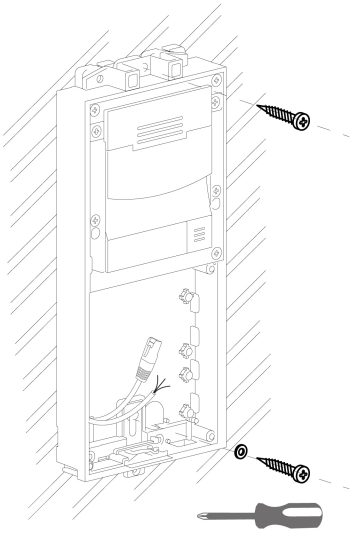

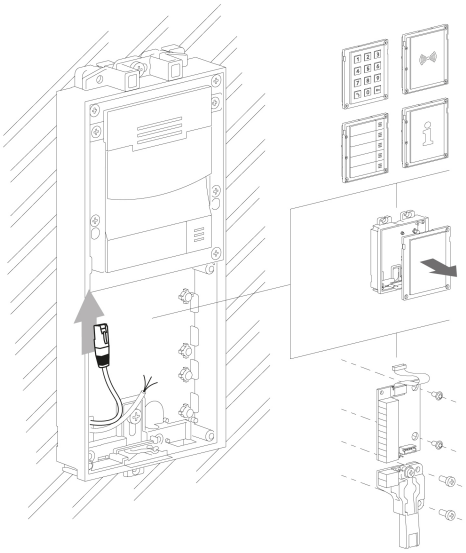

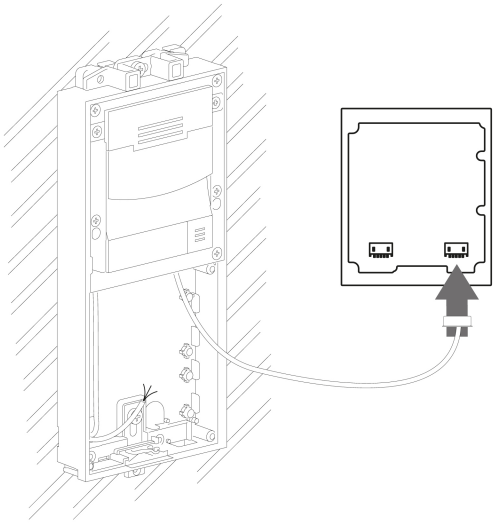

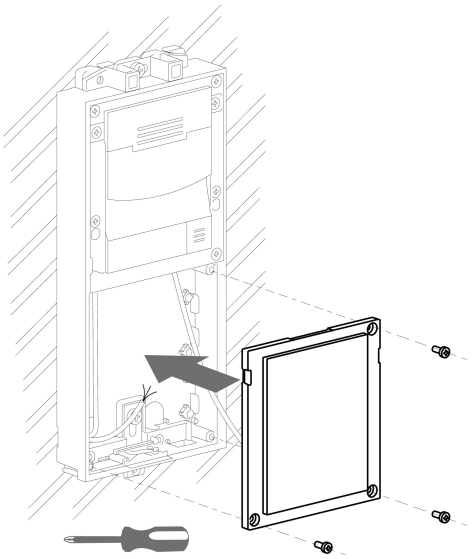

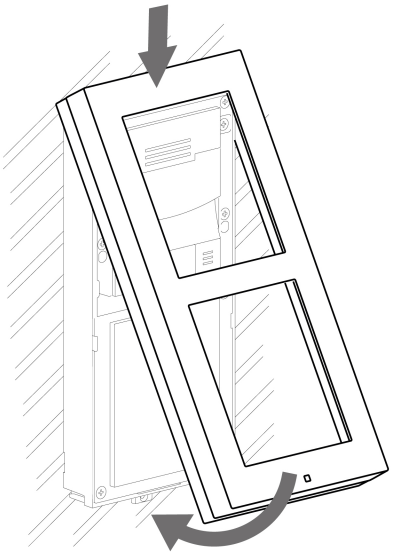

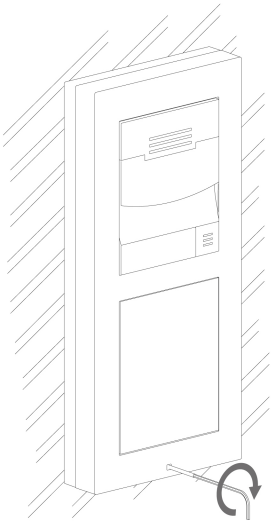

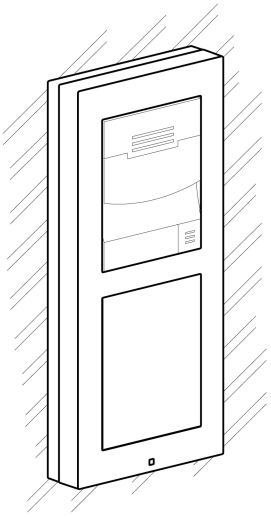

2.2.3 Module dimensions

Frames

- 9155011 – Flush mounting frame, 1 module
- 9155012 – Flush mounting frame, 2 modules
- 9155021 – Surface mounting frame, 1 module
- 9155022 – Surface mounting frame, 2 modules

Backplates

- 9155061 – 1 module
- 9155062 – 2 modules

2.3 Electric Installation

This subsection describes how to install the modules and connect the 2N Access Unit to the power supply and LAN and how to connect other elements.

Version A – Stand-alone Access Unit

1. Place the 2N Access Unit on the flush mounting box / pre-drilled holes with dowels and pull the cables through the bottom holes. Pull the Ethernet cable through the bottom hole to the left if necessary.
2. Insert the metal fitting elements up and down and screw the access unit tight. You can level the unit slightly in this mounting type.

Version B – Access Unit with an additional module

1. Unscrew the upper part of the additional base – keypad, RFID reader, etc.
2. Use a flat screwdriver to take the upper part out.
3. Slide the additional module to the access unit. Secure its position with small side wedges and screws.
4. Place the assembled modules on the flush mounting box / predrilled holes with dowels and pull the cables through the access unit bottom holes. Feed the Ethernet cable without the connector from the additional module to the access unit base if necessary.

2N Access Unit

Power Supply Connection

2N Access Unit can be powered either from an external 12 V / 1 A DC source or directly from the LAN equipped with PoE 802.3af supporting network elements.

External power supply

For reliability reasons, use a 12 V ±15 % SELV supply dimensioned to the current consumption as required for feeding of the access unit and connected modules.

Current consumption [A]	Part No.	Available power output [W]
1	91341482E, 91341482US	12

PoE power supply

2N Access Unit is compatible with the PoE 802.3af (Class 0–12.95 W) technology and can be fed directly from the LAN via the compatible network elements. If your LAN does not support this technology, insert a PoE injector, Part No. 91378100, between 2N Access Unit and the nearest network element. This power supply provides 2N Access Unit with 12 W for feeding of itself and the connected modules.

Combined power supply

2N Access Unit can be fed from an external power supply and PoE at the same time. In this configuration, the maximum power for the connected modules is available.

LAN Connection

2N Access Unit is connected to the Local Area Network (LAN) via the UTP/STP cable (Cat 5e or higher) terminated with a terminal board as shown in the figure below. As the device is equipped with the Auto-MDIX function, either the straight or crossed cable can be used.

Caution

- We recommend the use of a LAN surge protection.
- We recommend the use of a shielded SSTP Ethernet cable.

Caution

There may be connectivity problems in **2N Access Unit** version 586v2 if a cable longer than 30 m is used for LAN connection. If this happens, we recommend you to:

- integrate another network element (switch) to shorten the jump
- feed the device from an external 12 V supply
- change the PoE phantom supply (typically TP-LINK) to spare-pair supply – Phihong injector, **Part No. 91378100**
- change the Ethernet bitrate to Half Duplex – 10 mbps

UTP Cable Connection to Access Unit Terminal Board

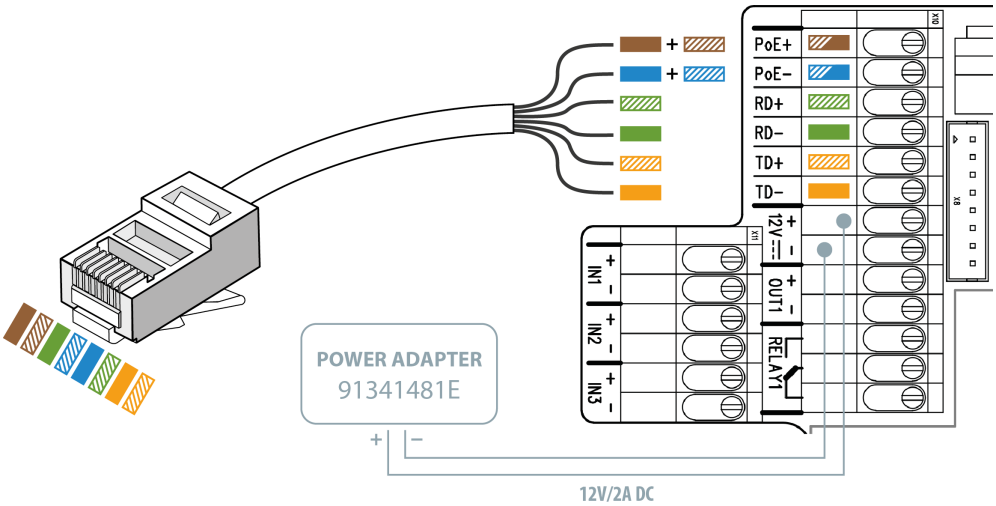

Legend to the figure	
PoE, RD, TD	LAN (PoE according to 802.1af) terminals
IN1, IN2, IN3	IN1, IN2 and IN3 terminals used as an input in the passive/active mode (–30 V to +30 V DC) for departure button, open door sensor, ESS etc. connection • OFF = open OR U_{IN}> 1.5 V • ON = closed contact OR U_{IN}< 1.5 V

OUT1	OUT1 active output terminals for connection of **2N®** **IP Security Relay** or electric lock: 8 up to 12 V DC depending on power supply (PoE: 10 V; adapter: power supply voltage minus 2 V), up to 400 mA
RELAY1	RELAY1 terminals with accessible 30 V / 1 A AC/DC NO/NC contact
12 V / 1 A	External supply terminals for **2NAccess Unit** – 12 V / 1 A
RESET	RESET / FACTORY RESET button
RJ-45	RJ-45 adapter connector – no need to use the PoE, RD and TD terminals for this connector

- Output wiring diagram for Relay terminals

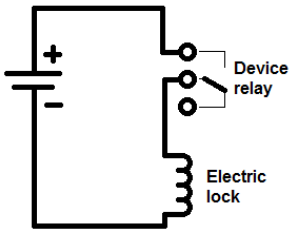

The electric lock is opened by power supply connection.

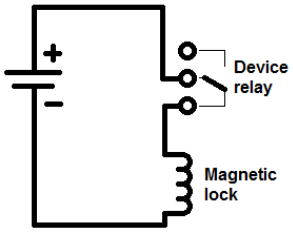

The magnetic lock is opened by power supply disconnection.

Tip

- Wiring diagram of IN1, IN2 and IN3 terminals in active mode

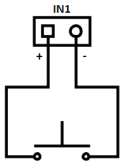

- Wiring diagram of IN1, IN2 and IN3 terminals in passive mode

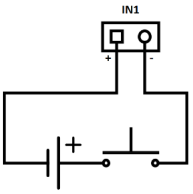

Device Restart

Press the RESET button (between the LED indicators in the right-hand upper part) shortly to restart the device.

Factory Reset

2N Access Unit is equipped with a RESET button, which is located between the LED indicators (LED1 and LED2 as shown in the figure below) in the right-hand upper part of the unit. The button is located in the middle of the lower part in version 586v4. Press the button shortly (< 1 s) to restart the system without changing configuration.

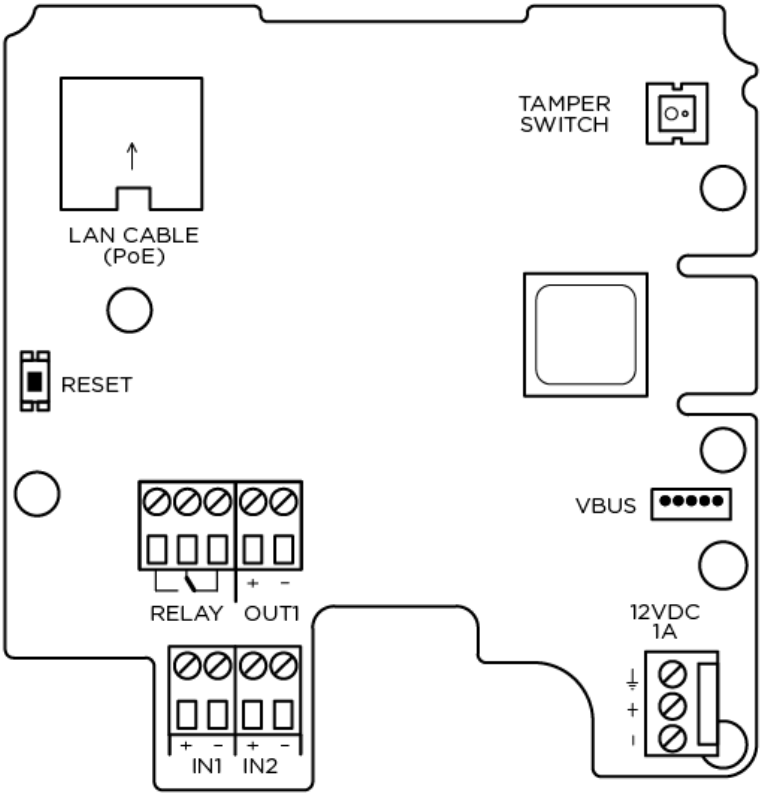

2N Access Unit Connectors, PCB Version 599v3

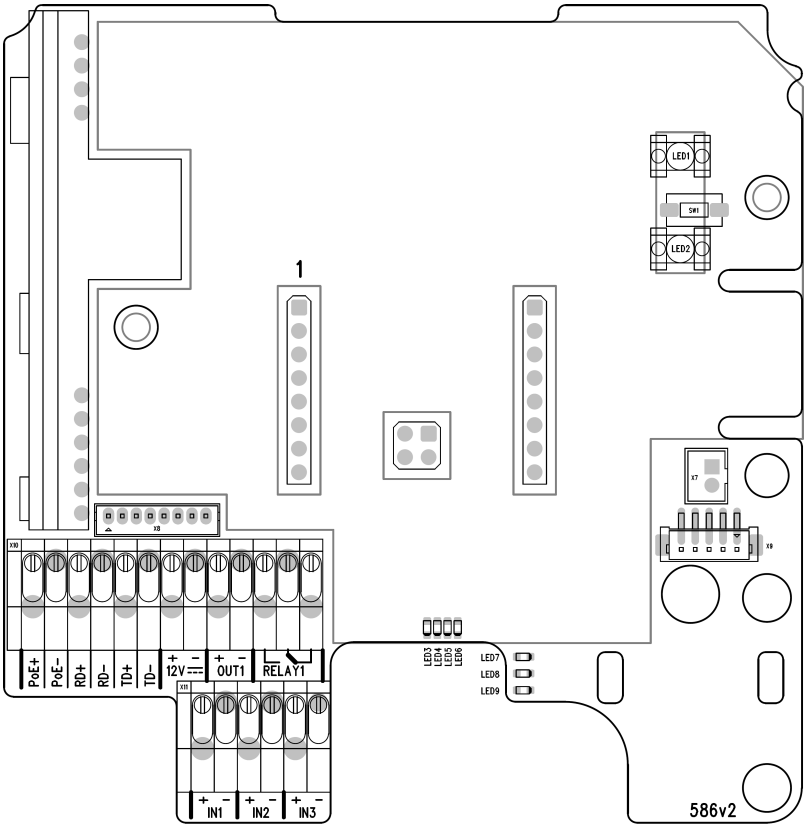

2N Access Unit Connectors, PCB Version 586v2

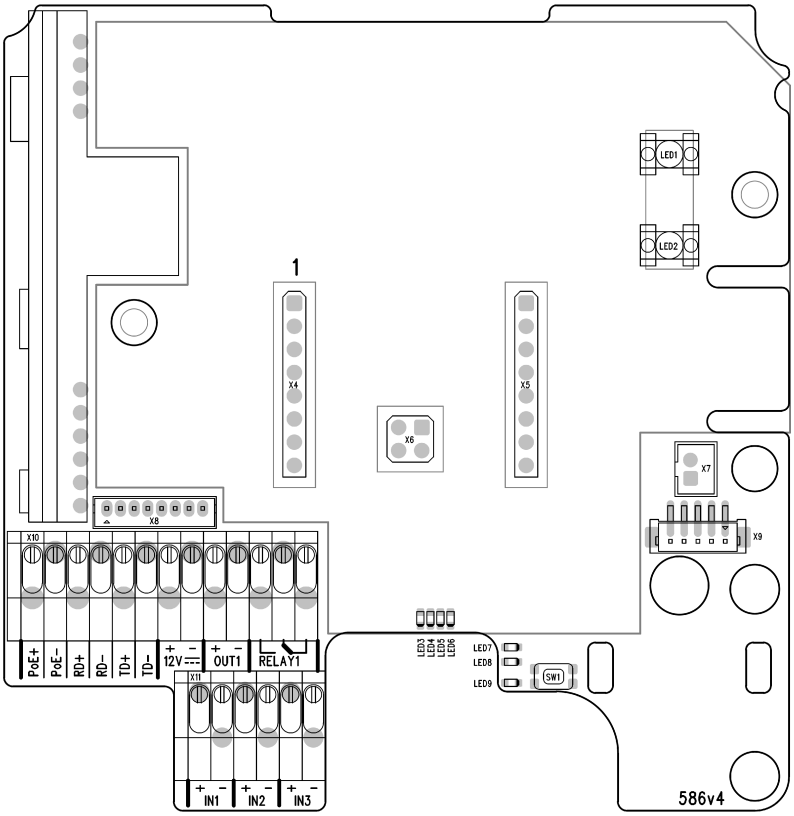

2N Access Unit Connectors, PCB Version 586v4

To **get the current IP address,** follow the instructions below:

- Press and hold the RESET button.
- Wait for approx. 20 s until **the red and green LEDs in the right-hand bottom part of the motherboard shine simultaneously** (LED8 and LED9 in the figure above).
- Release the RESET button.
- The device announces the current IP address via the speaker automatically.

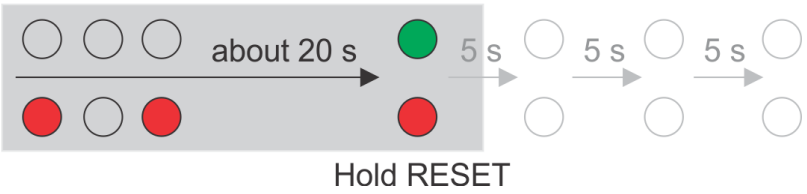

To switch on the **static IP address mode** (DHCP OFF), follow the instructions below:

- Press and hold the RESET button.
- Wait until**the red and green LEDs in the right-hand bottom part of the motherboard shine simultaneously** (approx. 20 s).

- Wait until the red LED goes off (approx. 5 s).
- Release the RESET button.

The following network parameters will be set after restart:

- IP address: 192.168.1.100
- Network mask: 255.255.255.0
- Default gateway: 192.168.1.1

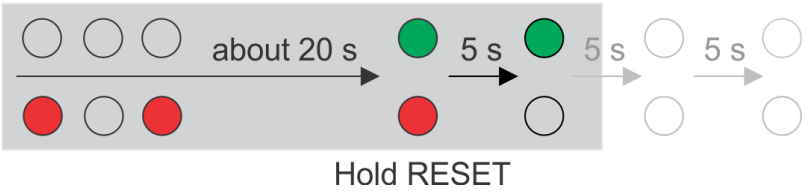

To switch on the **dynamic IP address mode** (DHCP ON), follow the instructions below:

- Press the RESET button.
- Wait until**the red and green LEDs in the right-hand bottom part of the motherboard shine simultaneously**(approx. 20 s).
- Wait until the red LED goes off (approx. 5 s).
- Wait until the green LED goes off and the red LED comes on again (another 5 s).
- Release the RESET button.

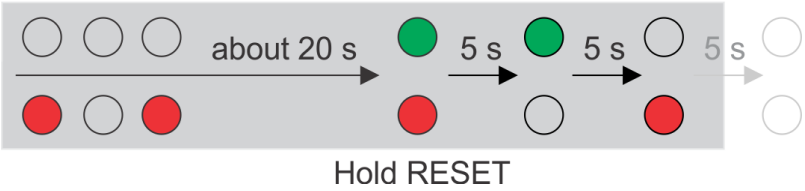

To reset **the factory values,** follow the instructions below:

- Press the RESET button.
- Wait until**the red and green LEDs in the right-hand bottom part of the motherboard shine simultaneously** (approx. 20 s).
- Wait until the red LED goes off (approx. 5 s).
- Wait until the green LED goes off and the red LED comes on again (another 5 s).
- Wait until the red LED goes off (approx. 5 s).
- Release the RESET button.

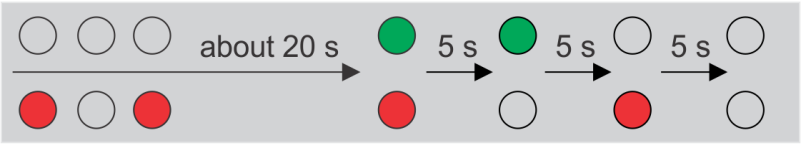

Hold RESET

Caution

- In case of resetting the factory default settings on a device with a version of firmware 2.18 or higher it is necessary to reprogram the **2N® IP Security Relay** using the instructions from section **2.4**.

Available Switches

Location	Name	Description
Basic unit	Relay 1	**Passive switch:** NO/NC contact, up to 30 V / 1 A AC/DC
	Output 1	**Active switch output:** 8 up to 12 V DC depending on power supply (PoE: 10 V; adapter: power supply voltage minus 2 V), up to 400 mA
	Tamper switch	Helps to secure the system against tampering. The information about unauthorised manipulation with the device can be used in the menu Hardware / Digital Inputs / Tamper Switch, in Automation a it is also logged in the Events.

- Output wiring diagram for Relay terminals

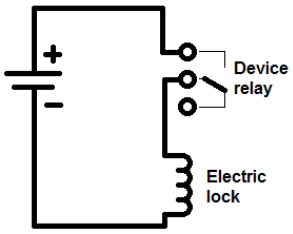

The electric lock is opened by power supply connection.

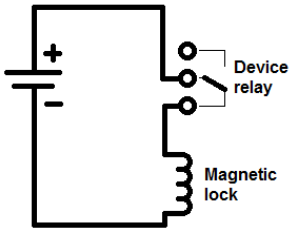

The magnetic lock is opened by power supply disconnection.

Warning

When you connect a device containing a coil, such as a relay or an electromagnetic lock, it is necessary to protect the intercom output againstvoltage peak while switching off the induction load. For this way of protection we recommend a 1 A / 1000 V diode (e.g., 1N4007, 1N5407, 1N5408) connected antiparallel to the device.

2.4 Extending Module Connection

2N Access Unit allows to connect following extending modules:

- Keypad
- Touch keypad
- 125 kHz RFID card reader
- 13.56 MHz RFID card reader
- 13.56 MHz RFID Card Reader NFC support
- Bluetooth & RFID reader 125kHz, 13.56MHz, NFC
- Bluetooth & RFID reader 125kHz, secured 13.56MHz, NFC
- Touch keypad & RFID reader 125kHz, 13.56MHz, NFC
- Touch keypad & RFID reader 125kHz, secured 13.56MHz, NFC
- Bluetooth reader
- Fingerprint reader
- I/O module
- Infopanel
- Wiegand module
- Security relay

Module Bus Interconnection

All the modules that can be connected to 2N Access Unit are interconnected via a bus. The bus starts on the basic unit and goes over all the modules. The order of modules on the bus is irrelevant. And it also irrelevant which bus connector on the module is used as the input and which is used as the output.

The modules include a 220 mm long bus interconnecting cable; Part No. 9155037 Wiegand modules and Part No. 9155034 I/O modules include an 80 mm long bus cable. These two modules can be hidden inside one of the modules described below (Infopanel, Keypad, RFID card reader, Bluetooth) and/or placed freely behind a standalone access unit (in a mounting box, e.g.).

You can order a separate bus cable (Part Nos. 9155050, 9155054, 9155055) of the length of 1 m, 3 m or 5 m for remote module installation. Typically, it helps install an RFID card reader on the opposite side of the wall on which 2N Access Unit is installed. This long cable can only be used once on the bus.

Module Power Supply

All the modules connected to **2N Access Unit**, except for the Tamper Switch, are powered from the bus. The available bus power output depends on the power supply type. The basic unit can use a 2 A power supply to increase the bus power available to the modules connected.

Power supply	Specification	Available power output
External supply	12 V ±15% / 1 A	12 W
PoE	802.3af (Class 0–12.95 W)	12 W

The count of modules on the bus is limited by the available power supply output. The maximum count of the modules on the bus is 30.

Basic unit (571v3)	Consumption [W] (Maximum value)
At relax	1.2
OUT 1	4.8
Total	**6**

Module	Idle consumption [W] (Minimum value)	Full load [W] (Maximum value)	Special elements [W]
Basic unit (586v3)	1.2	6	
Infopanel (580v2)	0.17	0.64	
Keypad (579v2)	0.20	1.55	
125 kHz RFID card reader (584v2)			
13.56 MHz RFID card reader (583v2)	0.42	0.89	

Module	Idle consumption [W] (Minimum value)	Full load [W] (Maximum value)	Special elements [W]
Bluetooth module (2271v2)	0.15	0.3	
I/O module (577v2)	0.35	0.66	Closed relay 0.13
Wiegand module (581v1)			

Specimen configuration consumption computation:

Module	Minimum consumption [W]	Maximum consumption [W]
Basic unit	1.2	6
13.56 MHz RFID card reader (583v2)	0.42	0.89
I/O module (577v2)	0.35	0.66
Tamper switch	0	0
Wiegand module (581v1)	x	x
Total	**2.07**	**7.55**

It is obvious from the specimen configuration that all the modules have sufficient outputs when an external power supply is used. When a PoE supply is used, the power output is insufficient for all the modules, which results in automatic decrease in backlight level, active output current supply, volume and LED intensity.

Some modules need a specific power output for their specific activities: the I/O module, e.g., requires 0.13 W for relay closing (not included in the minimum consumption).

Keypad Module

The Keypad module (**Part No. 9155031**) is used for a numeric access to the system.

- The module contains two bus connectors for **2N Access Unit**.
- These two connectors are fully interchangeable and can be used either as inputs from the basic unit or outputs to other modules.

- If this module is the last one on the bus, one of the connectors remains unconnected.
- The module package includes a 220 mm long interconnecting cable.

Touch Keypad

The Touch keypad (Part No. 9155047) provides a numerical input in the system.

- The module contains two 2N Access Unit bus connectors.
- These two connectors are fully interchangeable and can be used both as inputs from the main unit and outputs to other modules.
- If this module is the last one on the bus, one of the connectors remains unconnected.
- The module package includes a 220 mm long interconnecting cable.

125 kHz RFID Card Reader Module

The 125kHz RFID card reader module (Part No. 9155032) is used for reading RFID card Ids in the 125 kHz band.

- The module contains two bus connectors for 2N Access Unit.
- These two connectors are fully interchangeable and can be used either as inputs from the basic unit or outputs to other modules.
- If this module is the last one on the bus, one of the connectors remains unconnected.
- The module package includes a 220 mm long interconnecting cable.

The following RFID cards can be read:

- EM4100, EM4102, HID Proximity

13.56 MHz RFID Card Reader Module

The 13.56 MHz RFID card reader module (Part No. 9155033) is used for reading RFID card Ids in the 13.56 MHz band.

- The module contains two bus connectors for 2N Access Unit.
- These two connectors are fully interchangeable and can be used either as inputs from the basic unit or outputs to other modules.
- If this module is the last one on the bus, one of the connectors remains unconnected.
- The module package includes a 220 mm long interconnecting cable.

The following RFID cards can be read (only card serial number is read):

- ISO 14443A

Mifare Classic 1k & 4k, DESFire EV1, Mini, Plus S&X, Ultralight, Ultralight C

- ISO 14443B

CEPAS, HID iCLASS

- JIS X 6319

Felica

13.56 MHz RFID Card Reader NFC support

The 13.56 MHz RFID card reader (Part No. 9155040) is used for reading RFID card Ids in the 13.56 MHz band.

- The module contains two bus connectors.
- These two connectors are fully interchangeable and can be used both as inputs from the main unit and outputs to other modules.
- If this module is the last one on the bus, one of the connectors remains unconnected.
- The module package includes a 220 mm long interconnecting cable.

The following RFID cards can be read (only the card serial number is read):

- ISO/IEC 14443A Mifare Classic 1k & 4k, DESFire EV1, Mini, Plus S&X, Ultralight, Ultralight C
- ISO/IEC 14443B CEPAS, HID iCLASS
- JIS X 6319 Felica
- ISO/IEC 18092 SmartPhone with NFC/HCE support, since Android version 4.3

Bluetooth & RFID reader 125kHz, 13.56MHz, NFC

Bluetooth with a combined 125 kHz and 13.56 MHz card reader module (Part No. 9155082) is used for Smartphone/2N® Mobile Key tablet/card access control, making user calls and/or other functions.

- NFC – a licensed function, for 2N® Mobile Key for Android only.
- The module contains two bus connectors.
- These two connectors are fully interchangeable and can be used either as inputs from the basic unit or outputs to other modules.
- If this module is the last one on the bus, one of the connectors remains unconnected.
- The module package includes a 220 mm long interconnecting cable.

The following RFID cards can be read:

- EM4100, EM4102, HID® Proximity
- ISO14443A
  - Mifare Classic 1k & 4k, DESFire EV1, Mini, Plus S&X, SmartMX, Ultralight, Ultralight C, SLE44R35, my-d move (SLE66Rxx), PayPass, Legic Advant
- ISO14443B
  - Calypso, CEPAS, Moneo, SRI512, SRT512, SRI4K, SRIX4K, PicoPass, HID iCLASS

Tip

- To accelerate card reading, you are recommended to select the card types used by the user in the module settings.

Bluetooth & RFID reader 125kHz, secured 13.56MHz, NFC

Bluetooth with a combined 125 kHz and secured 13.56 MHz card reader (Part No. 9155084) is used for Smartphone/2N® Mobile Key tablet/card access control, making user calls and/or other functions.

- NFC – a licensed function, for 2N® Mobile Key for Android only.
- The module contains two bus connectors.
- These two connectors are fully interchangeable and can be used either as inputs from the basic unit or outputs to other modules.
- If this module is the last one on the bus, one of the connectors remains unconnected.
- The module package includes a 220 mm long interconnecting cable.

The following RFID cards can be read:

- EM4100, EM4102, HID® Proximity
- ISO14443A
  - Mifare Classic 1k & 4k, DESFire EV1, Mini, Plus S&X, SmartMX, Ultralight, Ultralight C, SLE44R35, my-d move (SLE66Rxx), PayPass, Legic Advant
- ISO14443B
  - Calypso, CEPAS, Moneo, SRI512, SRT512, SRI4K, SRIX4K, PicoPass, HID iCLASS

Tip

- To accelerate card reading, you are recommended to select the card types used by the user in the module settings.

Touch keypad & RFID reader 125kHz, 13.56MHz, NFC

The touch keypad with a combined 125 kHz and 13.56 MHz card reader (Part No. 9155081) is used for code/card access control, making user calls and/or other functions. The keypad surface is very sensitive yet weatherproof at the same time.

- NFC – a licensed function, for 2N® Mobile Key for Android only.
- The module contains two bus connectors.
- These two connectors are fully interchangeable and can be used either as inputs from the basic unit or outputs to other modules.
- If this module is the last one on the bus, one of the connectors remains unconnected.
- The module package includes a 220 mm long interconnecting cable.

The following RFID cards can be read:

- EM4100, EM4102, HID® Proximity
- ISO14443A
  - Mifare Classic 1k & 4k, DESFire EV1, Mini, Plus S&X, SmartMX, Ultralight, Ultralight C, SLE44R35, my-d move (SLE66Rxx), PayPass, Legic Advant
- ISO14443B
  - Calypso, CEPAS, Moneo, SRI512, SRT512, SRI4K, SRIX4K, PicoPass, HID iCLASS (SN only)

Tip

- To accelerate card reading, you are recommended to select the card types used by the user in the module settings.

Touch keypad & RFID reader 125kHz, secured 13.56MHz, NFC

The touch keypad with a combined 125 kHz and secured 13.56 MHz card (Part No. 9155083) reader is used for code/card access control, making user calls and/or other functions. The keypad surface is very sensitive yet weatherproof at the same time.

- NFC – a licensed function, for 2N® Mobile Key for Android only.
- The module contains two bus connectors.
- These two connectors are fully interchangeable and can be used either as inputs from the basic unit or outputs to other modules.
- If this module is the last one on the bus, one of the connectors remains unconnected.
- The module package includes a 220 mm long interconnecting cable.

The following RFID cards can be read:

- EM4100, EM4102, HID® Proximity
- ISO14443A
  - Mifare Classic 1k & 4k, DESFire EV1, Mini, Plus S&X, SmartMX, Ultralight, Ultralight C, SLE44R35, my-d move (SLE66Rxx), PayPass, Legic Advant
- ISO14443B
  - Calypso, CEPAS, Moneo, SRI512, SRT512, SRI4K, SRIX4K, PicoPass, HID iCLASS (also PACS ID from iCLASS SE, iCLASS SEOS)

Tip

- To accelerate card reading, you are recommended to select the card types used by the user in the module settings.

Bluetooth Reader

The Bluetooth reader module (Part No. 9155046) helps authenticate and subsequently open doors using Android and iOS based smartphones via the Bluetooth protocol 4.0 as RFID card replacement. Install the 2N® Mobile Key application from Google Play and Appstore to m ake authentication work properly. The application requires phones with Android OS 4.4 and higher and iOS 9 and higher.

The module contains two 2N Access Unit bus connectors.

The two connectors are fully interchangeable and can be used both as inputs from the main unit or outputs to other modules.

If this module is the last one on the bus, one of the connectors remains unconnected.

The package includes a 220 mm long interconnecting cable.

The module uses the 2.4 GHz frequency.

IDs from the following smart phones can be read:

Android 4.4 and higher

iPhone 4S and higher with iOS 8 and higher

Fingerprint reader

The **Fingerprint reader** is used for automated verification of human fingers for access control and intercom control.

The module contains two **2N Access Unit** bus connectors.

These two connectors are fully interchangeable and can be used both as inputs from the main unit and outputs to other modules.

If this module is the last one on the bus, one of the connectors remains unconnected.

The module package includes a 220 mm long interconnecting cable.

Important module properties:

FBI PIV and Mobile ID certification – FAP20

Durable glass touch surface

Rejects spoof fingerprints

-20 to 55 ºC operating temperature range,

0–90% relative humidity, noncondensing

> ⚠ **Note**
>
> A higher moisture may deteriorate finger papillary line scanning. You are advised to dry your finger and the reader scanning surface for successful authentication.

I/O Module

The I/O module (**Part No. 9155034**) is used for extending of the number of inputs and outputs.

The module contains two bus connectors for **2N Access Unit**.

These two connectors are fully interchangeable and can be used either as inputs from the basic unit or outputs to other modules.

If this module is the last one on the bus, one of the connectors remains unconnected.

The module package includes an 80 mm long interconnecting cable.

The inputs / outputs are addressed as follows:**<module_name>.<input/output_name>**, e.g. module5.relay1. Configure the module name in the Module name parameter in the Hardware / Extenders menu.

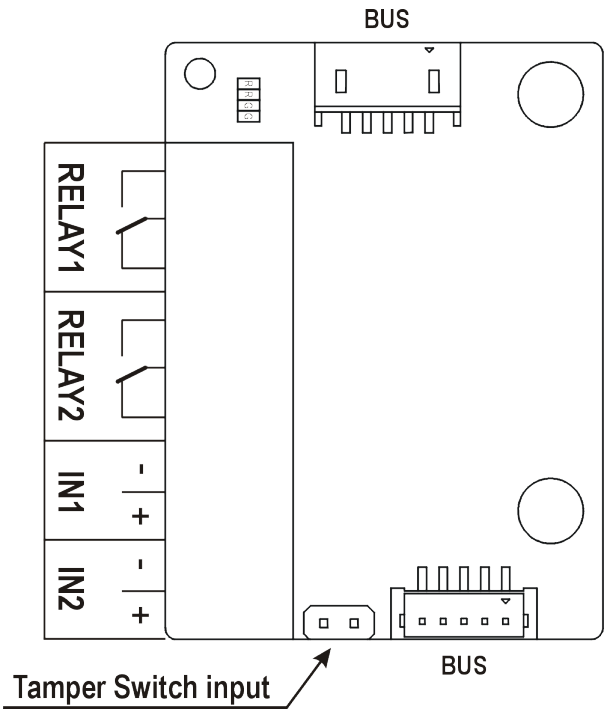

RELAY1	RELAY1 terminals with accessible 30 V / 1 A AC/DC NO/NC contact
RELAY2	RELAY2 terminals with accessible 30 V / 1 A AC/DC NO/NC contact
IN1	IN1 terminals for input in passive/ active mode (−30 V to +30 V DC) OFF = open or U_{IN}> 1.5 V ON = short-circuit or U_{IN}< 1.5 V
IN2	IN2 terminals for input in passive/active mode (−30 V to +30 V DC) OFF = open or U_{IN}> 1.5 V ON = short-circuit or U_{IN}< 1.5 V
TAMPER	Tamper switch input, Part No. **9155038**

Infopanel Module

The Infopanel module (**Part No. 9155030**) is used for inserting and backlighting of printed information.

The module contains two bus connectors for **2N Access Unit**.

These two connectors are fully interchangeable and can be used either as inputs from the basic unit or outputs to other modules.

If this module is the last one on the bus, one of the connectors remains unconnected.

The module package includes a 220 mm long interconnecting cable.

Name tag dimensions: 69.2 (W) x 86.7 (H) mm (dimensional tolerance: +0; -0.5 mm).

For the printing template refer to www.2n.cz

Wiegand Module

The Wiegand module (Part No. 9155037) helps connect an external Wiegand device (RFID card reader, fingerprint or other biometric data reader) and/or connect 2N Access Unit to an external security exchange. All the inputs and outputs are galvanically isolated from 2N Access Unit with the insulation strength of 500 V DC.

The module contains two bus connectors for 2N Access Unit.

These two connectors are fully interchangeable and can be used either as inputs from the basic unit or outputs to other modules.

If this module is the last one on the bus, one of the connectors remains unconnected.

The module package includes an 80 mm long interconnecting cable.

Configure the module name in the Module name parameter in the Hardware / Extenders menu.

The LED IN input is addressed as follows: <module_name>.<input1>, e.g. module2. input1.

The Tamper input is addressed as follows:<module_name>.<tamper>, e.g. module2. tamper.

The LED OUT (negated)output is addressed as follows: <module_name>.<output1>, e. g. module2.output1.

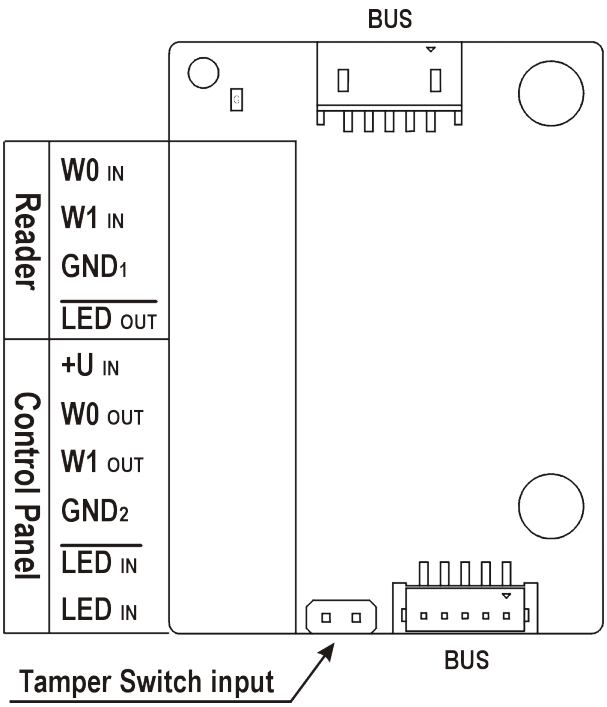

Reader	W0IN, W1 IN, GND1	Isolated 2-wire WIEGAND IN
	LEDOUT	Isolated open LED OUT switched against GND1(up to 24 V / 50 mA)
Control Panel	+UIN	+U (5 to 15 V DC) WIEGAND OUT power supply input
	W0OUT, W1 OUT, GND 2	Isolated 2-wire WIEGAND OUT
	LEDIN (negated)	Isolated input for open LED IN, input activated by GND_2
	LEDIN	Isolated input for open LED IN, input activated by +U
	G	active supply LED indicator +UINWIEGAND OUT
	TAMPER	Tamper switch input, Part No. 9155038

2N ® IP Security Relay

The 2N® IP Security relay (Part No. 9159010) is used for enhancing security between the access unit and the connected electric lock. It significantly enhances security of the connected electric lock as it prevents unlocking by forced opening of the 2N Access Module.

Function:

The 2N® IP Security relay is a device installed between the access unit (outside the secured area) and an electric lock (inside the secured area). The 2N® IP Security relay includes a relay that can only be activated if the valid opening code is received from the access unit.

Specifications:

Passive switch: NO and NC contacts, up to 30 V / 1 A AC / DC

Switched output:

- Where the security relay is fed from the intercom, 9 to 13 V DC is available on the output depending on the power supply (PoE: 9 V; adapter: source voltage of minus 1 V) / 400 mA DC.
- Where the security relay is fed from an external power supply, 12 V / 700 mA DC is available on the output.

Dimensions: (56 x 31 x 24) mm

Weight: 20 g

Installation:

The 2N® IP Security relay is installed onto a two-wire cable between the access unit and the electric lock inside the area to be secured (typically behind the door). The device is powered and controlled via this two-wire cable and so can be added to an existing installation. Thanks to its compact dimensions, the device can be installed into a standard mounting box.

Connection:

Connect the 2N® IP Security relay to the 2N Access Unit as follows:

To the active output (OUT1 or OUT2), or

To the relay output (RELAY1 or RELAY 2) in series with a 12 V DC external power supply.

Connect the electric lock to the 2N® IP Security relay as follows:

- To the switched output.
- To the passive output in series with the external power supply.

er supply.

The device also supports a Departure button connected between the 'PB' and '-HeliosIP/2N IP intercom' terminals. Press the Departure button to activate the output for 5 seconds.

Status signalling

Green LED	Red LED	Status
flashing	off	Operational mode
on	off	Activated output
flashing	flashing	Programming mode – waiting for initialisation
on	flashing	Error – wrong code received

Configuration:

Connect the 2N® IP Security relay to the properly set access unit security output. For settings refer to the 2N Access Unit Configuration Manual is installed. Make sure that one LED at least is on or flashing.

Press and hold the 2N® IP Security relay Reset button for 5 seconds to put the device in the programming mode (both the red and green LEDs are flashing).

Activate the output switch using the keypad, telephone, etc. The first code sent from the intercom will be stored in the memory and considered valid. After code initialisation, the 2N® IP Security relay will pass into the operational mode (green LED flashing).

Caution

In case of resetting the factory default settings on a device with a version of firmware 2.18 or higher, it is necessary to reprogram the 2N® IP Security Relay using the instructions above.

Tip

FAQ: 2N® IP Security Relay device description and use with 2N IP intercom

Tip

Video Tutorial Door intercoms 2N IP – Security Relay

Connection:

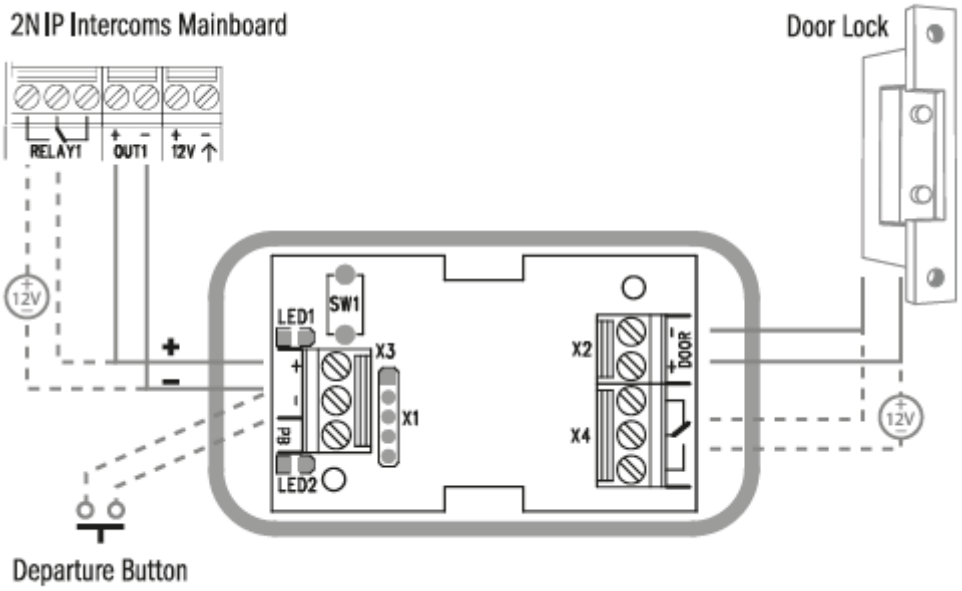
2N IP Intercoms Mainboard
Door Lock
RELAY1
OUT1
12V
LED1
SW1
X3
X1
X2
X4
DOOR
PB
LED2
12V
12V
Departure Button

2.5 Mounting Completion

Mounting Completion

Check the connection of all wires and the RJ-45 plug to the pigtail (adapter) connected to the motherboard.

Caution

- Make sure that the terminals of all the unused connectors are tightened properly to avoid sound vibrations.

Frame Mounting

Check the frame sealing before fitting the frame.

Version A

Screw the flush mounting frame in the upper and bottom parts.

Version B

Hang the wall mounting frame on the hook in the upper part and then screw it tight in the bottom part.

Caution

- Improper mounting may deteriorate the 2N Access Unit waterproofness. Water infiltration may damage the electronic part.
- Make sure that all the holes are filled with some waterproof material – the top part, around the cables and the screws.
- Use silicone or some other sealant to seal the box against the wall if uneven to avoid water leakage and wall damping.

Most Frequent Mounting Errors

At first, mount the metal bolts, level the bases on an even surface and tighten the screws.

Caution

- Make sure that the bases are levelled properly to avoid water leakage and electronic damage.

The examples in the figures below show incorrectly assembled bases. This happens, in particular, where the screws are tightened first.

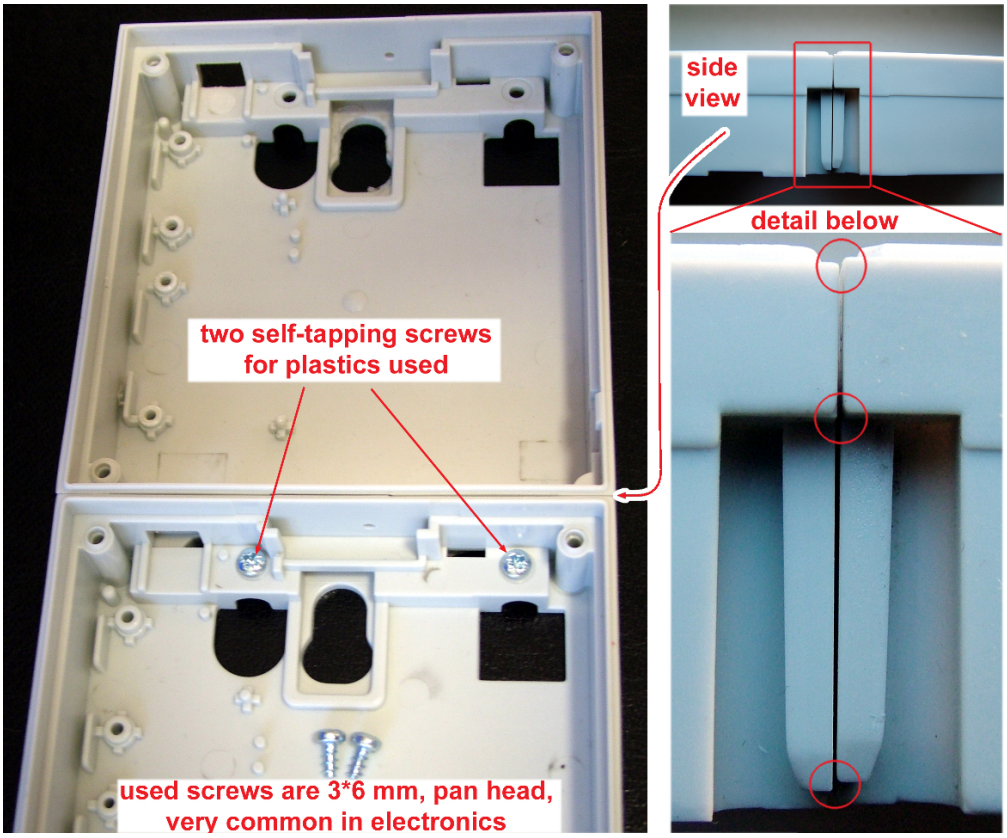

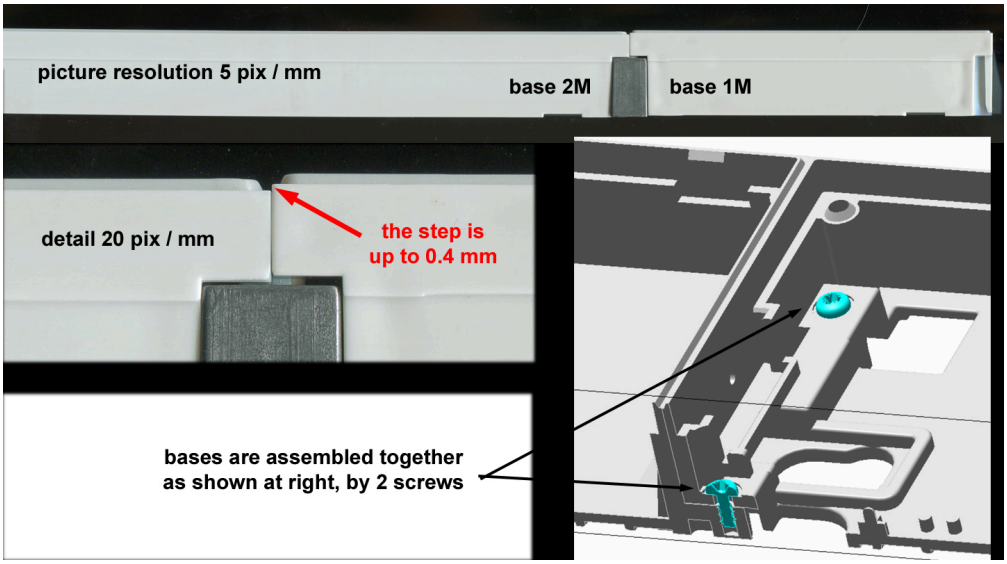
picture resolution 5 pix / mm
base 2M
base 1M
detail 20 pix / mm
the step is
up to 0.4 mm
bases are assembled together
as shown at right, by 2 screws

3. Maintenance

Cleaning

If used frequently, the device surface, the keypad in particular, gets dirty. Use a piece of soft cloth moistened with clean water to clean the device. You are recommended to follow the principles below while cleaning:

- Do not use aggressive detergents (such as abrasives or strong disinfectants).
- Clean the device in dry weather in order to make waste water evaporate quickly.

Warning

- Prevent water from getting inside the access unit.
- Do not use Alcohol-based cleaners.

4. Technical Parameters

Audio

- **Speaker:** 0.8 W / 8 Ω

Interface

- **Power supply:** 12 V ±15 % / 1 A
- **PoE:** PoE 802.3af (Class 0–12.95 W)
- **LAN:** 10/100BASE-TX with Auto-MDIX, RJ-45
- **Recommended cabling:** Cat-5e or higher
- **Supported protocols:** DHCP opt. 66, SMTP, 802.1x, TFTP, HTTP, HTTPS, Syslog
- **Passive switch:** make and break contact, up to 30 V / 1 A AC/DC
- **Active switch output:** 8 to 12 V DC according to power supply (PoE: 10 V; adapter: source voltage minus 2 V), up to 400 mA
- **Tamper switch** is part of the **2N Access Unit**
- **Inputs: passive / active mode (-30 V to +30 V DC)**
  - OFF = open or U_{in}> 1.5 V
  - ON = short-circuit or U_{in}< 1.5 V

RFID card reader

- **Frequency:** 13.56 MHz & 125 kHz
- **Supported 13.56 MHz cards (only card serial number is read):**
  - EM4100, EM4102, HID® Proximity
  - Mifare Classic 1k & 4k, DESFire EV1, Mini, Plus S&X, SmartMX, Ultralight, Ultralight C, SLE44R35, my-d move (SLE66Rxx), PayPass, Legic Advant
  - Calypso, CEPAS, Moneo, SRI512, SRT512, SRI4K, SRIX4K, PicoPass, HID iCLASS (also PACS ID from iCLASS SE, iCLASS SEOS)
- **Supported 125 kHz cards:** EM4100, EM4102, HID Prox

2N® IP Verso – Bluetooth module

- Bluetooth 4.0 Compliant (Bluetooth Low Energy, BLE)
- **Security**: asymmetric RSA-1024 and symmetric AES-128 encryption
- **RX sensitivity**: up to -93 dBm
- **Range**: adjustable (short ~ 0.5m, medium ~ 2m, long ~ up to 10m)
- **Power consumption**: 20mA at 12V DC
- **Operational temperature range**: -40°C ~ +60°C
- **Storage temperature range**: -40°C ~ +70°C
- **Dimensions**: 97x105x30mm
- Compatible with 2N® IP Verso, 2N® LTE Verso and 2N Access Unit
- Mobile app. support: Android 5.0 and higher, iOS 11.0 and higher

Mechanical properties

- **Cover:** robust zinc casting with surface finish (minor surface shade nuances are acceptable)
  - **91550XX – NICKEL**
    - Material - Zamak 410 - Zn95Al4Cu1
    - Surface treatment - Zn/Cu20/Ni25b max. 80 µm
  - **91550XXB – BLACK**
    - Material - Zamak 410 - Zn95Al4Cu1
    - Surface treatment - Cataphoretic coating Black 30 µm, RAL 9004 – Signalschwarz (colour is not guaranted – it is cataphoretic)
- **Operating temperature:** -40 °C to 60 °C
- **Operating relative humidity:** 10 % – 95 % (non-condensing)
- **Maximum altitude for intended use**: 2000 m a.s.l.
- **Storage temperature:** -40 °C to 70 °C
- **Dimensions:**
  - Wall (surface) mounting frame:
    - 1 module: 107 (W) x 130 (H) x 28 (D) mm
    - 2 modules: 107 (W) x 234 (H) x 28 (D) mm
  - Flush mounting frame:
    - 1 module: 130 (W) x 153 (H) x 5 (D) mm
    - 2 modules: 130 (W) x 257 (H) x 5 (D) mm
  - Flush mounting box (minimum hole dimensions):
    - 1 module: 108 (W) x 131 (H) x 45 (D) mm
    - 2 modules: 108 (W) x 238 (H) x 45 (D) mm

- **Weight:** Max net weight: 2 kg / max gross weight: 0.5 kg – based on configuration
- **Cover rating:** IP54

5. Supplementary Information

Here is what you can find in this section:

- 5.1 Troubleshooting
- 5.2 Directives, Laws and Regulations
- 5.3 General Instructions and Cautions

5.1 Troubleshooting

For the most frequently asked questions refer to **faq.2n.cz**.

5.2 Directives, Laws and Regulations

2N Access Unit conforms to the following directives and regulations:

2014/35/EU on the harmonisation of the laws of the Member States relating to the making available on the market of electrical equipment designed for use within certain voltage limits

2014/30/EU on the harmonisation of the laws of the Member States relating to electromagnetic compatibility

2011/65/EU on the restriction of the use of certain hazardous substances in electrical and electronic equipment

2012/19/EU on waste electrical and electronic equipment

2014/53/EU on the harmonisation of the laws of the Member States relating to the making available on the market of radio equipment

Industry Canada

This Class B digital apparatus complies with Canadian ICES-003. / Cet appareil numérique de la classe B est conforme a la norme NMB-003 du Canada.

FCC

NOTE: This equipment has been tested and found to comply with the limits for a Class B digital device, pursuant to part 15 of the FCC Rules. These limits are designed to provide reasonable protection against harmful interference in a residential installation. This equipment generates, uses and can radiate radio frequency energy and, if not installed and used in accordance with the instructions, may cause harmful interference to radio communications. However, there is no guarantee that interference will not occur in a particular installation. If this equipment does cause harmful interference to radio or television reception, which can be determined by turning the equipment off and on, the user is encouraged to try to correct the interference by one or more of the following measures:

- Reorient or relocate the receiving antenna
- Increase the separation between the equipment and receiver
- Connect the equipment into an outlet on a circuit different from that to which the receiver is connected
- Consult the dealer or an experienced radio/TV technician for help.

Changes or modifications to this unit not expressly approved by the party responsible for compliance could void the user's authority to operate this equipment.

Caution

In order to ensure the full functioning and guaranteed outputs we strongly recommend a verification of the timeliness of version of product or facility already during the installation process. The customer takes into consideration that the product or facility can achieve the guaranteed outputs and be fully operational pursuant to the producer's instructions only by using the most recent version of product or facility, which has been tested for full interoperability and has not been determined by the producer as incompatible with certain versions of other products, only in conformity with the producer's instructions, guidelines, manual or recommendation and only in conjunction with suitable products and facilities of the other producers. The most recent versions are available on the website https://www.2n.cz/cs_CZ/, or specific facilities, depending on their technical capacity, allow updating in the configuration interface. Should the customer use any other version of product or facility than the most recent one, or the version that has been determined by the producer as incompatible with certain versions of other producers' products of facilities, or the product or facility in a way incompatible with the producer's instructions, guidelines, manual or recommendation or in conjunction with unsuitable products or facilities of the other producers, he or she is aware of all potential limitations of functionality of such a product or facility and all relating consequences. Should the customer use any other than the most recent version of the product or facility, or the version that has been that has been determined by the producer as incompatible with certain versions of other producers' products of facilities, or the product or facility in a way incompatible with the producer's instructions, guidelines, manual or recommendation or in conjunction with unsuitable products or facilities of the other producers, he or she agrees that the company 2N TELEKOMUNIKACE a. s. is not liable neither for any limitation of such a product's functionality, nor for any damage, loss or injury relating to such a potential limitation of functionality.

5.3 General Instructions and Cautions

Please read this User Manual carefully before using the product. Follow all instructions and recommendations included herein.

Any use of the product that is in contradiction with the instructions provided herein may result in malfunction, damage or destruction of the product.

The manufacturer shall not be liable and responsible for any damage incurred as a result of a use of the product other than that included herein, namely undue application and disobedience of the recommendations and warnings in contradiction herewith.

Any use or connection of the product other than those included herein shall be considered undue and the manufacturer shall not be liable for any consequences arisen as a result of such misconduct.

Moreover, the manufacturer shall not be liable for any damage or destruction of the product incurred as a result of misplacement, incompetent installation and/or undue operation and use of the product in contradiction herewith.

The manufacturer assumes no responsibility for any malfunction, damage or destruction of the product caused by incompetent replacement of parts or due to the use of reproduction parts or components.

The manufacturer shall not be liable and responsible for any loss or damage incurred as a result of a natural disaster or any other unfavourable natural condition.

The manufacturer shall not be held liable for any damage of the product arising during the shipping thereof.

The manufacturer shall not make any warrant with regard to data loss or damage.

The manufacturer shall not be liable and responsible for any direct or indirect damage incurred as a result of a use of the product in contradiction herewith or a failure of the product due to a use in contradiction herewith.

All applicable legal regulations concerning the product installation and use as well as provisions of technical standards on electric installations have to be obeyed. The manufacturer shall not be liable and responsible for damage or destruction of the product or damage incurred by the consumer in case the product is used and handled contrary to the said regulations and provisions.

The consumer shall, at its own expense, obtain software protection of the product. The manufacturer shall not be held liable and responsible for any damage incurred as a result of the use of deficient or substandard security software.

The consumer shall, without delay, change the access password for the product after installation. The manufacturer shall not be held liable or responsible for any damage incurred by the consumer in connection with the use of the original password.

The manufacturer also assumes no responsibility for additional costs incurred by the consumer as a result of making calls using a line with an increased tariff.

Electric Waste and Used Battery Pack Handling

Do not place used electric devices and battery packs into municipal waste containers. An undue disposal thereof might impair the environment!

Deliver your expired electric appliances and battery packs removed from them to dedicated dumpsites or containers or give them back to the dealer or manufacturer for environmental-friendly disposal. The dealer or manufacturer shall take the product back free of charge and without requiring another purchase. Make sure that the devices to be disposed of are complete.

Do not throw battery packs into fire. Battery packs may not be taken into parts or short-circuited either.

2N TELEKOMUNIKACE a.s.

Modřanská 621, 143 01 Prague 4, Czech Republic

Phone: +420 261 301 500, Fax: +420 261 301 599

E-mail: sales@2n.cz

Web: www.2n.cz

v2.13