CRC220 and CRC221

INSTALLATION GUIDE

REF No.: DOC0014

ISSUE: 09

30th July 2015

Contents

1. Scope 1-1
2. Introduction 2-1
2.1 Features 2-1
2.1.1. PCB Features 2-1
2.1.2. Features Included in Enclosures (ENC & MET) 2-1
2.2 Operational Overview 2-2
3. Installation 3-1
3.1 Product Range 3-1
3.2 Connecting 12V DC Power to the Controller 3-1
3.3 RS485 Cabling 3-2
3.4 TCP/IP Connection 3-3
3.5 Reader Connections 3-3
3.6 Output Relay Connections 3-4
3.7 Request to Exit Button 3-4
3.8 Door Monitoring 3-4
3.9 Door Alarm 3-5
3.10 Tamper Alarm 3-6
3.11 Reader Arming 3-6
3.12 Fire Alarm Input 3-6
4. Configuring the CRC220/CRC221 4-1
4.1 Node Number Setting 4-1
4.2 Post Configuration Procedure 4-1
Appendix A - Connecting Readers to the CRC220/CRC221 ..... A-1
Appendix B - RS485 Cabling B-1
Appendix C - Setting Up a TCP/IP Connection C-1

1. Scope

This manual provides detailed instructions for the wiring and switch setting of version 1.5 of the CRC220 and CRC221 access control units. For earlier versions, please refer to issue 5 of this document. These controllers are specifically designed to work in conjunction with Norpass3 access control software. The way in which the controllers operate is managed from Norpass3. Therefore this guide must be used in conjunction with Norpass3 online help.

The CRC220 and CRC221 products are supplied in a range of packages to meet specific customer requirement. This manual is applicable to all CRC220 and CRC221 products. However, for those controllers that are supplied inside enclosures with integral power supply units, please also refer to the mounting and power connection instructions provided with the product.

2. Introduction

The CRC221 access control unit is used to control access through a single door. It has two reader/keypad interfaces plus connections for a free exit button and a door-monitoring device.

The CRC220 control unit is used to control access through up to two doors. It has two reader/keypad interfaces plus connections for a free exit button and a door-monitoring device for each door.

Although the controllers can validate cards and control access autonomously, they must be connected over a network to a PC running Norpass3 to allow updating of the card data and reporting of events and local alarm conditions.

2.1 Features

2.1.1. PCB Features

- 2 reader interfaces
- Controls access through 1 door (CRC221), up to 2 doors (CRC220)
- Supports up to 65,000 sequential cards or 8,000 random cards
- Supports combined Card & PIN security
- Supports ‘Buddy Mode’ (2 valid cards required for access)
- Supports both Wiegand and Clock & Data formats
- Door monitor input for each door
- Door alarm output for each door
- Arming input for each reader
- Card capture/auxiliary output for each reader
- Free exit input for each door
- Tamper switch input and tamper alarm output
- Fire alarm input for unlocking all doors in case of an emergency
- RS485 or TCP/IP network connection options

2.1.2. Features Included in Enclosures (ENC & MET)

- Integral 12VDC, 3A power supply
- Four individually fused 12VDC outputs for powering locking devices
- Locking device power supply can be linked to a Fire Alarm for unlocking all doors in case of an emergency
- Tamper switch

2.2 Operational Overview

Up to 64 CRC22x (CRC220 or CRC221) controllers can be managed from a PC running Norpass3 Access Management Software. The controllers are connected to the PC via either an RS485 bus or a TCP/IP network.

Where the controller is required to be connected to the PC over a TCP/IP network, it is necessary to to fit a TCP/IP interface (order code TCP/IP-220). Each controller can be connected directly to the Norpass3 host PC via the TCP/IP network or, where it is more convenient, the first controller can be connected to the PC via TCP/IP and onward connection to other controllers can be made via an RS485 bus from the TCP/IP interface module on the first controller. The network may comprise a combination of interfaces (see figure 2.1).

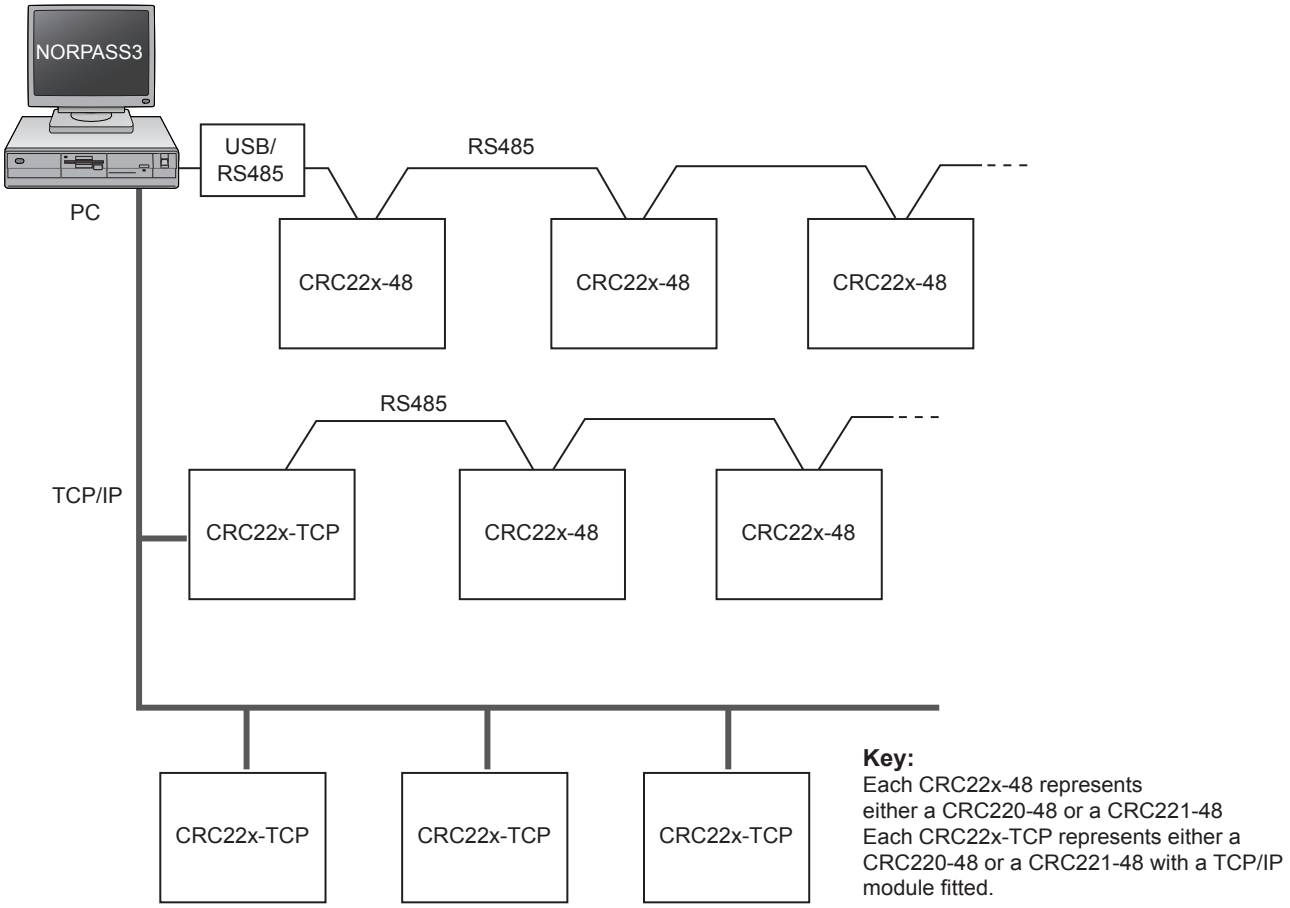

Figure 2.1 – Networking Options

Regardless of the overall network configuration, each controller on the same RS485 network must be given a unique node number. The node number is set up on DIP switches on the PCB.

All other configurable options for the controller are set in Norpass3.

3. Installation

3.1 Product Range

The CRC220 and CRC221 products are supplied in a range of packages, identified by the suffix to the product code. These are:-

- PCB only (no suffix)
- 'ENC' suffix - supplied in a plastic enclosure for 1 or 2 units with integral power supply
- 'MET' suffix - supplied in a metal enclosure for 1 or 2 units with integral power supply

Products supplied in an enclosure with integral power supply are shipped with separate instructions for fitting and power supply connection.

3.2 Connecting 12V DC Power to the Controller

For all CRC220 and CRC221 models that are supplied without an integral power supply unit, a suitable 12V DC power supply unit must be cabled to the unit and terminated at the power input connector (bottom left of the PCB in figure 3.2).

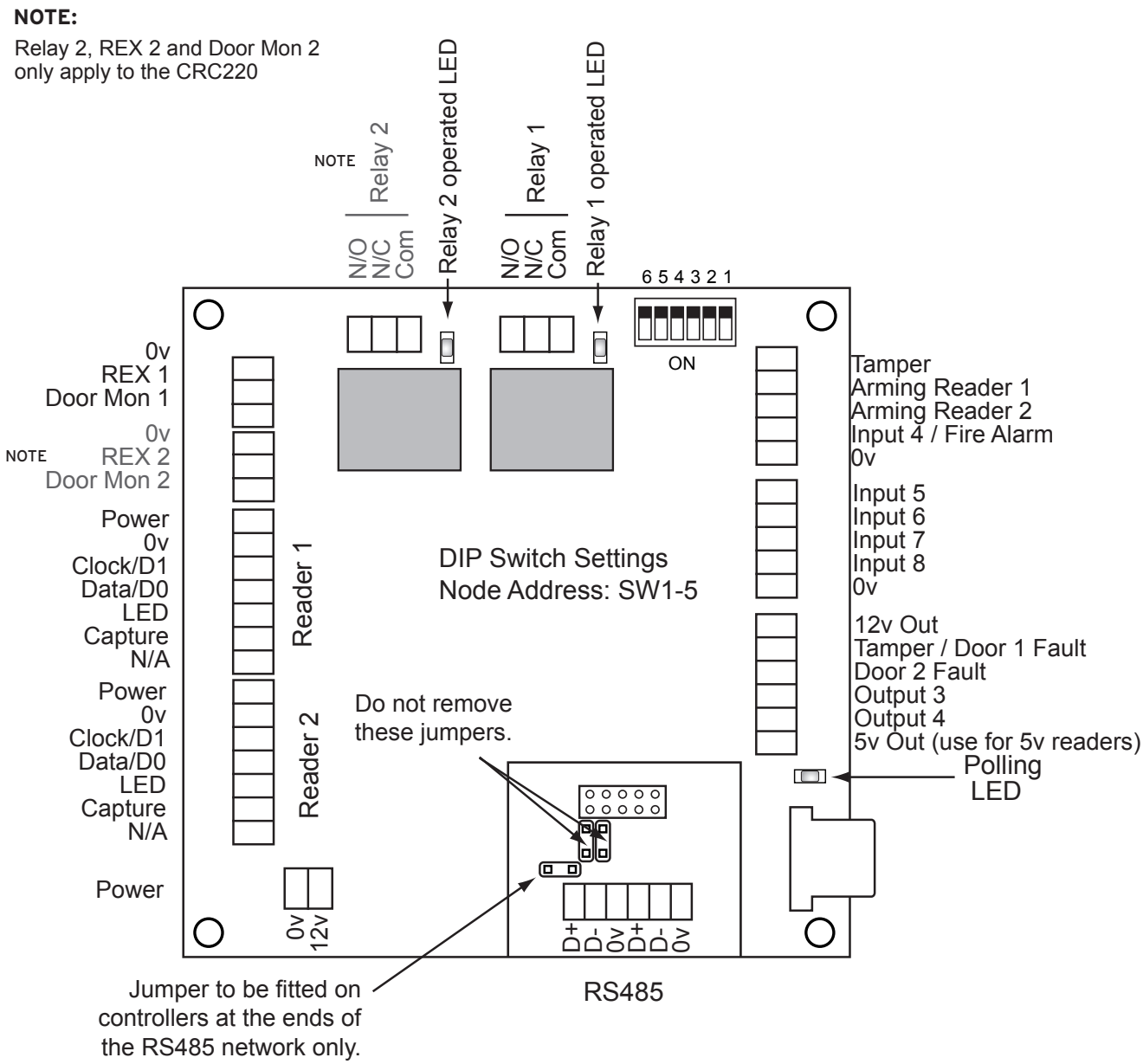

Figure 3.2 – Cable Termination on CRC220 PCB

3.3 RS485 Cabling

For connection to a PC hosting Norpass3, the RS485 interface must be cabled to a USB/RS485 adaptor at the PC. A maximum of 32 PCB's can be connected to a single comm port (USB/RS485 adaptor). Refer to Norpass3 online help for information on connecting the USB/RS485 adaptor and configuring the communications port.

The cabling must link all controllers in the network in the form of a 'daisy chain' using 2 twisted pair screened cable such as Belden 9729 or CAT 5.

Refer to Appendix B for details on how to cable the RS485 bus.

3.4 TCP/IP Connection

For connection to a TCP/IP network, it simply requires the connection of the RJ45 socket on the TCP/IP 'Thin Server' daughter board to a network access point using a 10BaseT/100BaseT patch cable. The Norpass3 hosting PC should be connected to a network access point on the same network. A suitable IP address should be assigned to the thin server by following the installation procedure described in Appendix C.

A TCP/IP daughter board, as well as providing communications between the associated controller and Norpass3, can provide onward communication to other controllers via an RS485 network. Connect the RS485 cable to the terminals on the daughter board as shown in figure 3.3. A jumper is fitted to the left of the terminal block. This connects a terminating resister across the data lines. Remove this jumper if this controller is not at the end of the RS485 network. Refer to Appendix B for instructions on cabling the RS485 network.

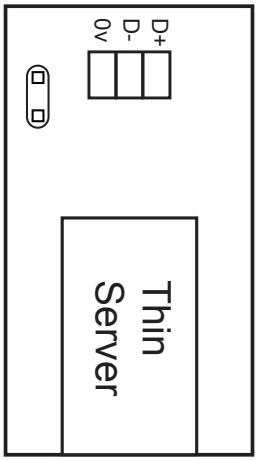

Figure 3.3 – Terminating RS485 on Thin Server

3.5 Reader Connections

For connecting each reader to the access control unit, refer to the wiring instruction cards provided with the access control unit and follow the instructions provided with the reader, making sure that you check its power requirement.

Before connecting a reader to the controller, identify its power requirement. Certain types of reader must be powered separately due to their current requirement (more than 200mA at 12V), refer to the reader's documentation. Most readers that can be powered through the access control unit will accept 12V DC. For those readers that require a 5V DC supply, connect all leads to the reader interface except the +v power lead. Connect this to the '5v Out' pin on the opposite edge of the PCB.

Connect the readers to the reader interfaces as shown in the figure 3.2. Appendix A provides specific wiring details for the most popular readers used with the CRC220 and CRC221. Where a reader needs to be powered separately, do not make any connection to the 'power' terminal on the reader interface, but ensure that the 0v lead of the reader is connected to 0v on the reader interface as this acts as the signal ground.

⚠ Do not power up the controller until you have checked that you have connected each reader to the correct voltage supply as shown in figure 3.2. Failure to do so may cause irreversible damage to the reader.

3.6 Output Relay Connections

Each output relay has both normally open and normally closed contacts together with a common return. Terminate the output cable according to the specific requirements of the installation. Figure 3.4 shows typical wiring of the normally open contacts for a door strike, and figure 3.5 shows typical wiring of the normally closed contacts for a mag lock.

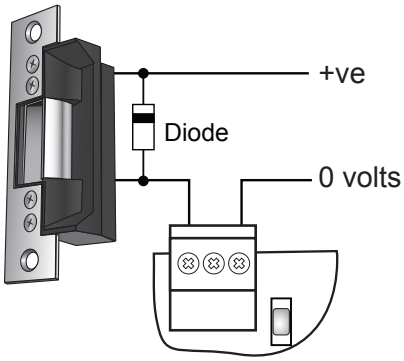

Figure 3.4

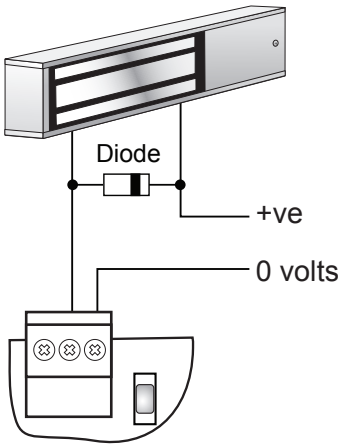

Figure 3.5

Always fit a back EMF protection device across any inductive load connected to the output relay contacts (as shown above). Failure to do this will cause damage to the controller. Damage caused in this way is not covered by the product warranty.

3.7 Request to Exit Button

A request to exit signal can be generated by a momentary short circuit between the 'REX' pin and the '0V common' pin. Connect a suitable 'normally open' push button between these terminals if required.

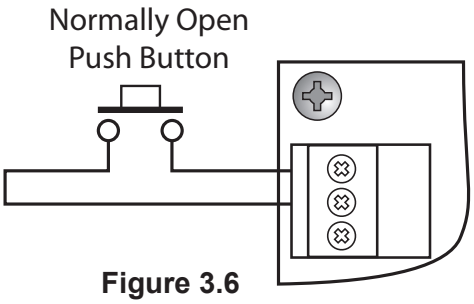

Figure 3.6

3.8 Door Monitoring

If it is necessary to raise an alarm when the door is forced open or held open beyond a predetermined time (see Norpass3 online help), a door monitor contact (closed when door is closed) can be wired between the 'Door Mon' pin and the '0V common' pin. There are two options for using door monitoring:

1. If each reader is being used to control a separate door, each set of contacts will need to be wired to its corresponding door contacts (CRC220 only).
2. If both readers are being used to control the same door, then only the reader 1 contacts should be wired to the door contacts. Note that for a CRC220, 'Single Door' mode must be enabled in Norpass3.

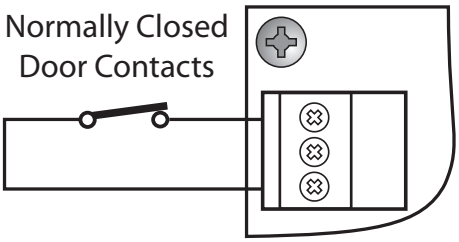

Figure 3.7

If door monitoring is not required, then it must be disabled in Norpass3 (door open alarm period set to ‘0’) to prevent an alarm condition from causing card reading problems. As an added precaution, we recommend that you connect a wire link between the door monitor and ground pins (as shown in figure 3.8).

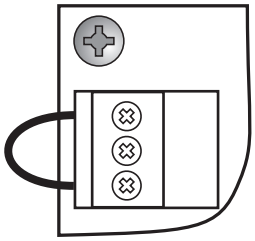

Figure 3.8

3.9 Door Alarm

Where door contacts are fitted and a local alarm needs to be raised whenever the door is forced open or is left open beyond a predetermined time, then a door alarm output is available for each reader port. These are open collector outputs that apply a ground when active. Figure 3.9 shows typical wiring of the door 1 alarm output.

Note: The door 1 alarm output is shared with the tamper alarm output.

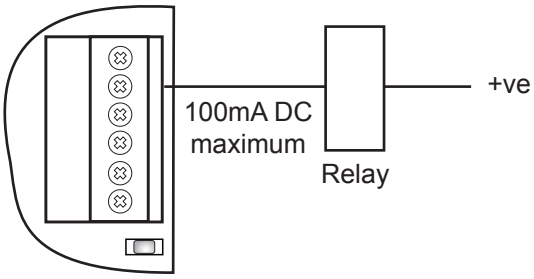

Figure 3.9

3.10 Tamper Alarm

If the controller PCB is being fitted into an OEM housing, a tamper switch (closed contact when housing is closed) can be wired between the 'Tamper' I/P pin and the '0V common' pin at the top left of the PCB. An open circuit between the pins will raise an alarm at the PCB.

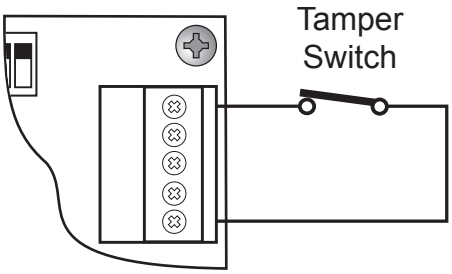

Figure 3.10

If the tamper alarm feature is not required or if more than one PCB is fitted in the housing, then a wire link should be fitted to all unused tamper alarm inputs as shown in figure 3.11.

.

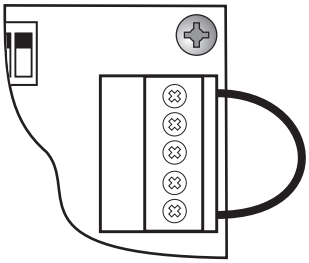

Figure 3.11

3.11 Reader Arming

If the reader arming feature is required, use contacts in the arming device such that the contacts are closed to disable the reader and opened to enable it. Wire the contacts in the arming device between the 'Arming' I/P pin of the associated reader and the '0V common' pin at the top right of the PCB (see figure 3.12). The reader will not read cards while there is a 0V condition connected to the 'Arming' I/P pin.

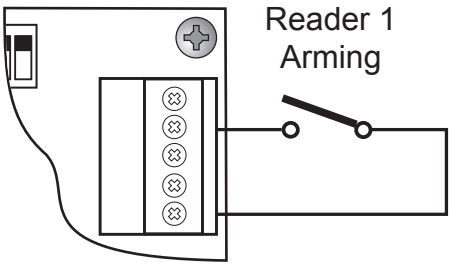

Figure 3.12

3.12 Fire Alarm Input

Where it is necessary to have a central control that can cause all doors to be unlocked in case of an emergency such as a fire, normally open relay contact (or switch contacts) can be wired to the fire alarm input of any of the controllers on the system. When the contacts close, the condition is relayed to Norpass3, which in turn sends an 'All doors open' command to all controllers.

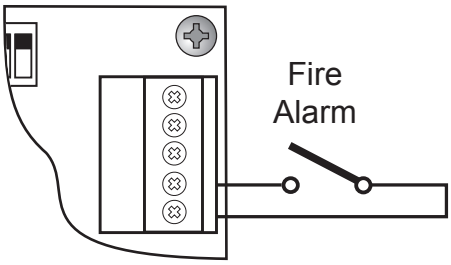

Figure 3.13

This feature is designed to operate as part of an overall safety scheme and should not be used to replace physical methods of opening doors during emergencies such as 'break-glass' points at each door.

4. Configuring the CRC220/CRC221

4.1 Node Number Setting

Although the main configuration of the CRC220 and CRC221 is carried out within the Norpass3 software (refer to Norpass3 online help), you must configure the node address using the DIP switches. Each controller connected to the same com port must be allocated a unique node number starting at ‘0’. The node number set in Norpass3 for each controller must correspond to the setting on the associated controller PCB. Switches 1 to 5 are used to set the node address in binary format:

= Node 0,

= Node 1,

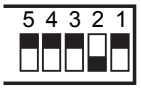

= Node 2,

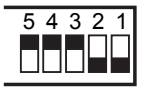

= Node 3, etc.

Here is the full lookup table of switch settings:

Node	Switch Setting				
	1	2	3	4	5
0	OFF	OFF	OFF	OFF	OFF
1	ON	OFF	OFF	OFF	OFF
2	OFF	ON	OFF	OFF	OFF
3	ON	ON	OFF	OFF	OFF
4	OFF	OFF	ON	OFF	OFF
5	ON	OFF	ON	OFF	OFF
6	OFF	ON	ON	OFF	OFF
7	ON	ON	ON	OFF	OFF
8	OFF	OFF	OFF	ON	OFF
9	ON	OFF	OFF	ON	OFF
10	OFF	ON	OFF	ON	OFF
11	ON	ON	OFF	ON	OFF
12	OFF	OFF	ON	ON	OFF
13	ON	OFF	ON	ON	OFF
14	OFF	ON	ON	ON	OFF
15	ON	ON	ON	ON	OFF

Node	Switch Setting				
	1	2	3	4	5
16	OFF	OFF	OFF	OFF	ON
17	ON	OFF	OFF	OFF	ON
18	OFF	ON	OFF	OFF	ON
19	ON	ON	OFF	OFF	ON
20	OFF	OFF	ON	OFF	ON
21	ON	OFF	ON	OFF	ON
22	OFF	ON	ON	OFF	ON
23	ON	ON	ON	OFF	ON
24	OFF	OFF	OFF	ON	ON
25	ON	OFF	OFF	ON	ON
26	OFF	ON	OFF	ON	ON
27	ON	ON	OFF	ON	ON
28	OFF	OFF	ON	ON	ON
29	ON	OFF	ON	ON	ON
30	OFF	ON	ON	ON	ON
31	ON	ON	ON	ON	ON

4.2 Post Configuration Procedure

When a CRC220 or CRC221 is first set up and connected to Norpass3, it is necessary to ensure that it is in a known state before proceeding. Carry out the following in Norpass3 for each controller:

1. Clear Events
2. Set both doors to ‘Normal’

These procedures are explained in Norpass3’s online help.

Appendix A - Connecting Readers to the CRC220/CRC221

The CRC220 and CRC221 controllers support a wide range of readers with Clock & Data or Wiegand interfaces. The termination of the reader cable conforms with industry standard connections. Here is a quick reference for terminating the most common readers supplied with the system.

Nortech MP1, WP1 and SP1 Readers (Cable/Pigtail)

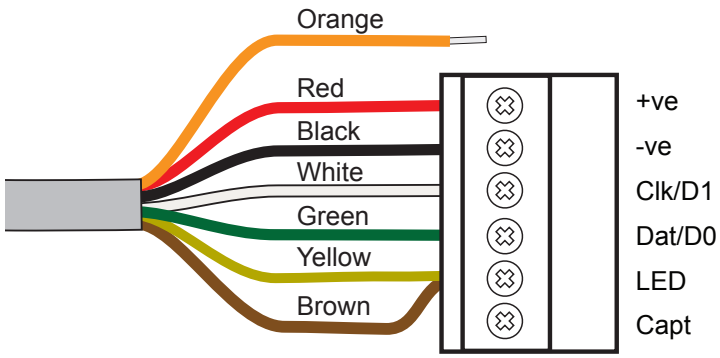

Colour	Function
Red	Supply +ve
Black	Supply -ve (0v)
White	Clock / Data 1
Green	Data / Data 0
Blue	Not connected
Yellow	LED
Orange	Format select (see below)
Brown	Buzzer (if required)

Nortech VP1, PP1 and VP1 Readers (Cable/Pigtail)

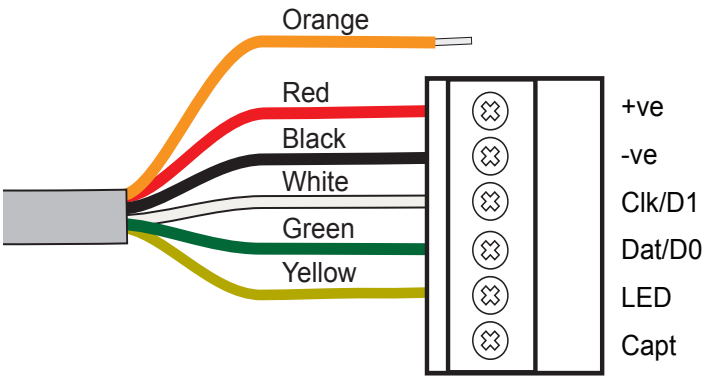

Colour	Function
Red	Supply +ve
Black	Supply -ve (0v)
White	Clock / Data 1
Green	Data / Data 0
Blue	Not connected
Yellow	LED
Orange	Format select (see below)
Brown	Not connected

Format Select: Use the 'Format Select' lead to set the required data output format by connecting it to either Ground or +VDC as follows:

Variant	Connect to Ground	Connect to +VDC
EM1	10-Digit Clock & Data	26-Bit Wiegand
DP1	26-Bit Wiegand	44-Bit Wiegand
ISO	10-Digit Clock & Data	32-Bit Wiegand
MIF, LEG	Dependant upon the customer specific firmware version	

Nortech MP1 and WP1 Readers (125kHz Terminal)

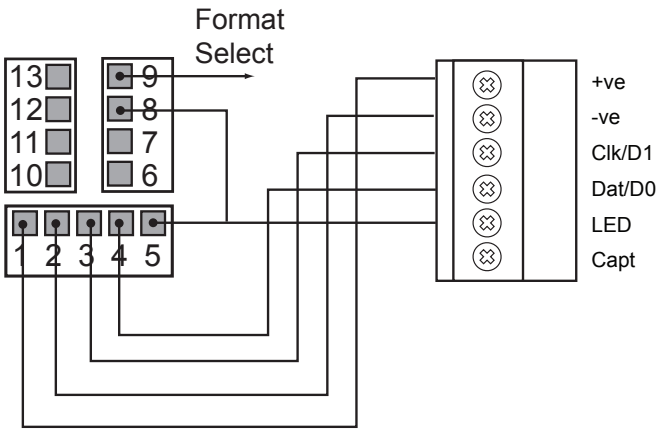

Terminal	Function
1	Supply +ve
2	Supply -ve (0v)
3	Clock / Data 1
4	Data / Data 0
5	Green LED
8	Buzzer
9	Format Select

Format Select: Use the 'Format Select' terminal to set the required data output format by connecting it to either Ground or +VDC as follows:

Variant	Connect to Ground	Connect to +VDC
EM1	10-Digit Clock & Data	26-Bit Wiegand
DP1	26-Bit Wiegand	44-Bit Wiegand

Nortech MP1 and WP1 Readers (13.56MHz Terminal)

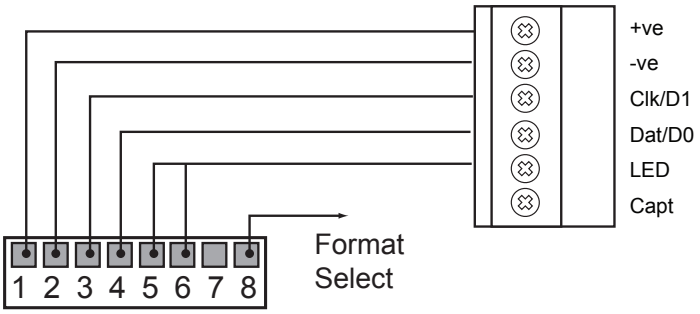

Terminal	Function
1	Supply +ve
2	Supply -ve (0v)
3	Clock / Data 1
4	Data / Data 0
5	Green LED
6	Buzzer
8	Format Select

Format Select: Use the 'Format Select' terminal to set the required data output format by connecting it to either Ground or +VDC as follows:

Variant	Connect to Ground	Connect to +VDC
ISO	10-Digit Clock & Data	32-Bit Wiegand
MIF, LEG	Dependant upon the customer specific firmware version	

iCLASS R10 Smart Card Reader (Pigtail)

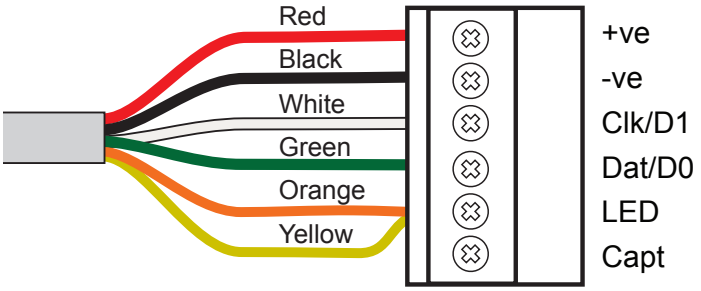

Core Colour	Function
Red	Supply +ve
Black	Supply -ve (0v)
White	Clock / Data 1
Green	Data / Data 0
Orange	Green LED
Yellow	Beeper (if required)
Pink	Not connected
Brown	Not connected
Violet	Not connected
Blue	Not connected

iCLASS R10 Smart Card Reader (Terminals)

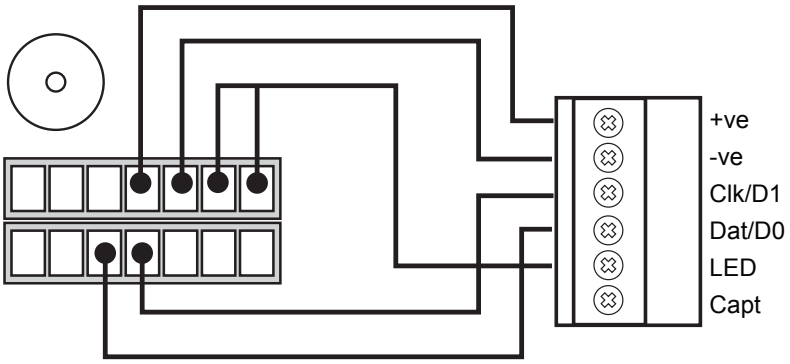

Note: This information is for general guidance only and was correct at the date of publication. Because reader manufacturers may occasionally change the way in which the readers are wired, you should also refer the reader manufacturer's instructions shipped with the product.

Appendix B - RS485 Cabling

For cabling from the USB/RS485 converter to the CRC220 and CRC221 controllers, you must use twisted pair screened cable such as Belden 9729 or CAT 5 to avoid communication problems. The cabling plan must be in the form of a 'daisy chain' (see examples below).

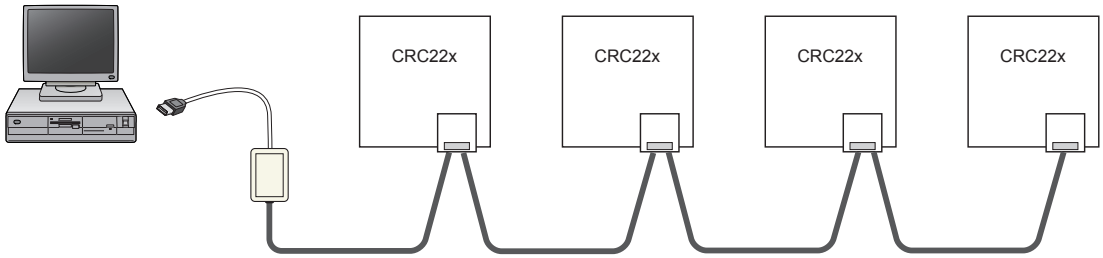

Correct

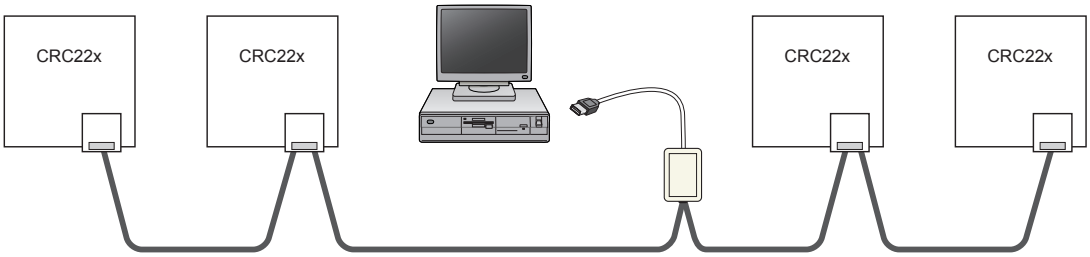

Correct

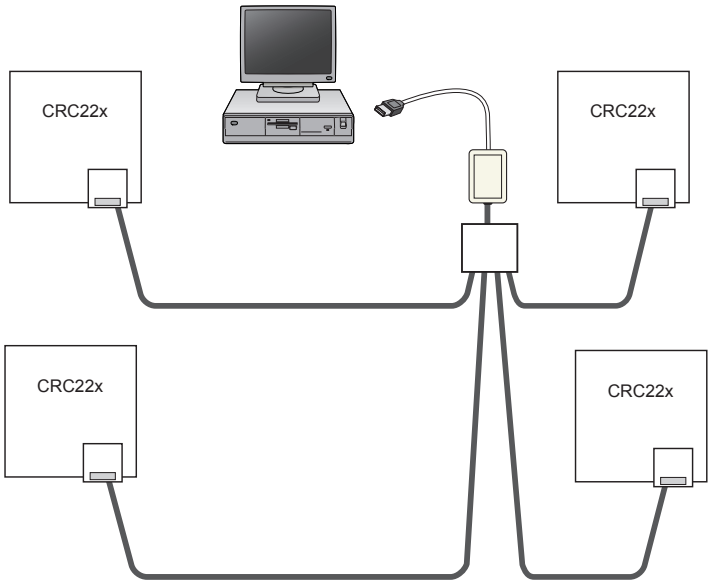

Incorrect

The maximum total length of cable between the first and last device is 1,200m.

Terminating Cables

Use 1 twisted pair for D+ and D- and another other twisted pair for signal ground.

Intermediate Devices

For intermediate devices in the chain, their are two sets of RS485 terminals. These are provided for ease of wiring and are not configured as 'in' and 'out'. Each cable can be connected to either of the sets of terminals. The jumper on the RS485 interface board connects a terminating resistor between D+ and D-. This should only be fitted at the extremes of the daisy chain. Ensure that this link is not fitted.

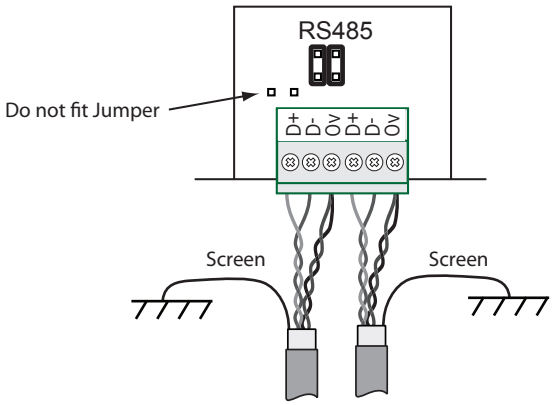

Last Device

The final device in the chain requires just one cable to be terminated. This can be connected to either of the sets of terminals. As this is at the extreme of the daisy chain the terminal resistor should be connected between D+ and D- (may not always be necessary for very short cable runs). Ensure that the jumper is fitted on the RS485 interface board.

Note: The USB/RS485 converter also has a terminating resistor jumper. Ensure that this link is always fitted unless the converter has been cabled as an intermediate device in the chain.

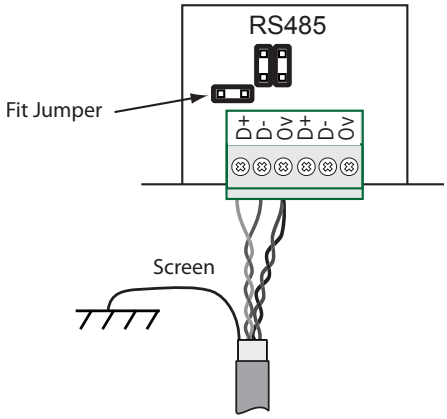

Grounding the Screen

Each cable screen must be grounded (connected to earth) at one end only. Below are two methods of correctly grounding the screen (any unused conductors in the cable should be grounded in the same way).

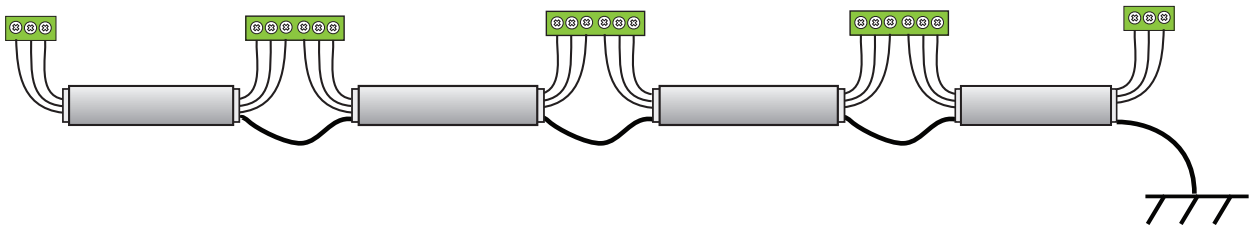

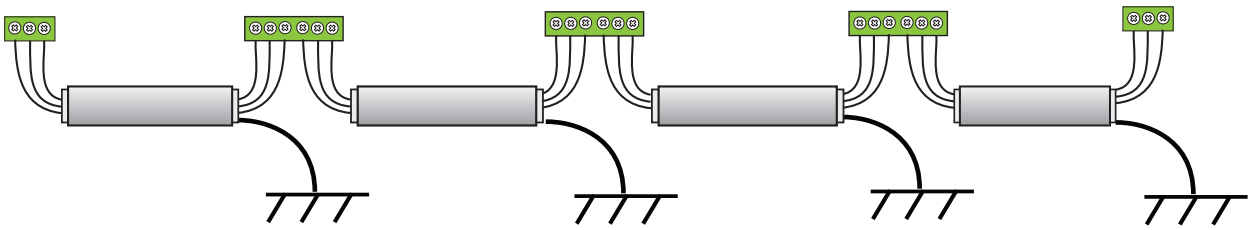

Appendix C - Setting Up a TCP/IP Connection

If a TCP/IP adaptor has been fitted to the CRC220 or CRC221, Norpass3 will need to communicate with it over the Local Area Network (LAN).

Preparation

Before you start, make a note of the MAC address (physical address) of the device. This is printed on the label on the thin server and appears something like: 00-80-A3-00-00-F8.

You will also need to run the Lantronix Device Installer program on a PC connected to the network. The program is supplied on the Norpass3 disk or you can download it from:

http://www.lantronix.com/support/downloads/?p=DEVICEINSTALLER

Setting Up the Device

For Norpass3 to communicate with the TCP/IP adaptor, you need to add a corresponding TCP/IP port to Norpass3, which requires the IP address and Port number of the adaptor. Each adaptor is factory set to obtain an IP address automatically, and the Port number is set to '10001'. There are two ways in which to assign an IP address to the adaptor depending on the customer's network:

Where the Network Uses DHCP to Assign An IP Address to a Connected Device

While the controller is powered down, use a standard Ethernet cable to connect the device to a network port and then power up the controller.

Within a few seconds, the DHCP server will detect the device and assign a free IP address to the device. You now need to find out which IP address has been assigned.

Connect your PC to the network and run Device Installer. The program will identify all Lantronix devices connected to the network and display them as shown here:

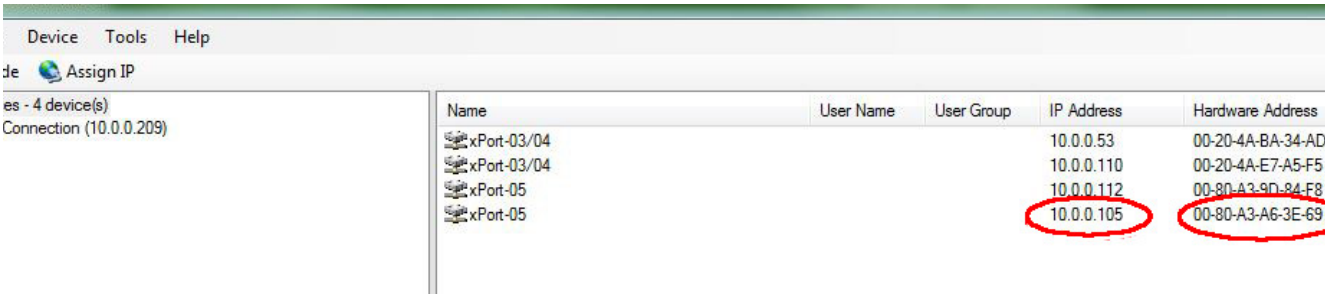

Look for the MAC address of your device in the device list and make a note of the IP address that has been assigned to it. You now have the information that you need to add the port to Norpass3.

Note: We recommend that you arrange with the Network Administrator that each device always receives the same IP address (Reservations). This will prevent any future disconnection and connection of devices on the network causing a new IP address to be assigned to this device, which would then require an update to the settings in Norpass3.

If this is not possible, we recommended that you use Device Installer to assign a fixed IP address to each device (see below).

Assigning a Fixed IP Address to the TCP/IP Device (Recommended)

While the controller is powered down, use a standard Ethernet cable to connect the device to a network port and then power up the controller.

Note: If you wish to connect to the TCP/IP-CRC220 device directly from your PC, remember to use a cross-over cable instead of a patch cable.

If DHCP is enabled on the network, the device will be automatically assigned an IP address on that network (see above).

Run the Device Installer. If DHCP is enabled, the device will be shown with a valid IP address against the MAC address. Otherwise it will be displayed in red with the comment 'unreachable'. The device will be assigned a default IP address from the range 169.254.x.x.

Choose an unassigned IP address on the network (check with the Network Administrator for available addresses). Select 'Assign IP' from the toolbar. Choose 'Assign a specific IP address' and follow the instructions to add the required address and subnet mask.

Once you have completed the procedure, click 'Search' on the Toolbar. The device should now be listed with the correct IP address. You are now ready to add the corresponding port to Norpass3.

Note: If you experience problems with the setup, you may have inadvertently altered one or more of the settings. It is recommended that you reset the settings to the factory default and start again. To reset to the factory settings, please follow the procedure described in the following document:

http://www.nortechcontrol.com/media/40175/lantronix-device-default-settings-for-crc220.pdf

Adding the Network Port to Norpass3

In Norpass3, choose 'Communication Ports' from the Installer/System Settings menu. The Comm Ports screen is displayed.

To add the port, click on 'Add new port' from the 'Tools' pane on the left. The right-hand pane is enabled for editing:

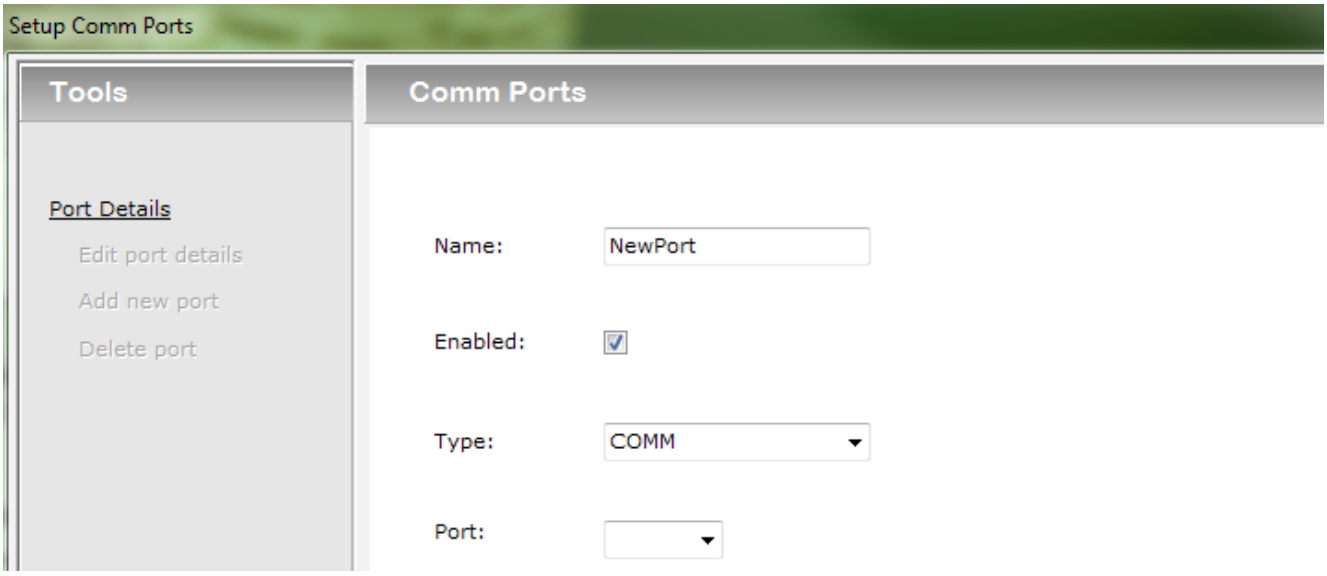

Fill in the appropriate details as follows:

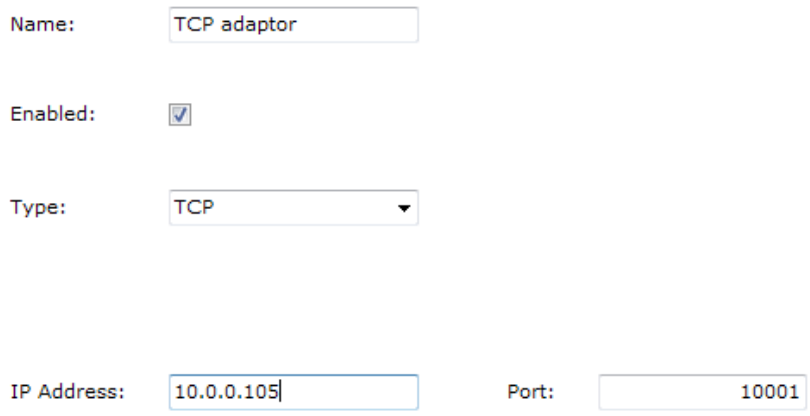

Give the port a descriptive name, select ‘TCP’ in the ‘Type’ box and enter the IP address of the device and the port number (10001). Once the port has been configured, tick the enable box to make it active.

Click the save (diskette) button in the bottom left of the window.

Click the ‘Done’ button when complete.

Finally, select the controller associated with the adaptor and set it’s Comm Port to the one that you have just added. You must also select each controller connected to the adaptor via RS485 in turn and set their Comm Port in the same way.